"People. Products. Results."
31-35 South Street | Danbury, CT 06810 | Tel: (203) 743-6741
www.PREFERRED-MFG.com

PREFERRED UTILITIES MFG CORPORATION

PREFERRED COMET

PCG-250-F
Preferred Comet Gas Burner

Manual SDI-PCG-250-F | Revision B | Publication Date: 8/14/2025



SPECIFICATIONS

Burner Model:	PCG-250-F	**Mounting Flange:**	Fixed Flange
Minimum Output:	1.58 mmbtu/hr	**Air Tube Diameter:**	10 inches
Maximum Output:	10.3 mmbtu/hr	**Air Tube Insertions:**	1/8" minimum insertion
Control Voltage:	120 Vac / 60 Hz 1 Phase		
Motor Voltage:	240/480 Vac 3 Phase	**Flame Safety:**	Single-Rod Ionization UV Scanner - (Optional)

Supply Line Pressure Required: 45"wc

Ignition: 15.6kVac Direct Spark Ignition. Standard burners are shipped with the ignition transformer mounted to the burner. If the transformer is to be remotely mounted, the ignition wire must not exceed 36" (914.4mm) per UL795.

Output rating at 0.2 "wc static pressure. Consult factory for burner heat input rating at other static pressures.
De-rate maximum input for altitude over 2000 ft. (610 m) by 4% each 1000 ft. (305 m) above sea level.

INSTALLATION OF BURNER

INSTALLATION OF THE BURNER MUST BE DONE BY A QUALIFIED INSTALLER IN ACCORDANCE WITH REGULATIONS OF THE NATIONAL FUEL GAS CODE, NFPA 54/ANSI Z223.1, AND IN COMPLETE ACCORDANCE WITH ALL LOCAL CODES AND AUTHORITIES HAVING JURISDICTION.

INCORRECT INSTALLATION, ADJUSTMENT, OR MISUSE OF THIS BURNER COULD RESULT IN DEATH, SEVERE PERSONAL INJURY, OR SUBSTANTIAL PROPERTY DAMAGE AND WILL VOID THE WARRANTY.

A QUALIFIED INSTALLER IS THE PERSON WHO IS RESPONSIBLE FOR THE INSTALLATION AND ADJUSTMENT OF THE EQUIPMENT AND WHO IS LICENSED TO INSTALL GAS-BURNING EQUIPMENT IN ACCORDANCE WITH ALL CODES AND ORDINANCES.

THESE INSTRUCTIONS SHOULD BE AFFIXED TO THE BURNER OR ADJACENT TO THE HEATING APPLIANCE.

BURNER SERVICE LOG				
SERVICE DATE	**TECHNICIAN**	**COMPANY / ADDRESS**	**CONTRACTOR LICENSE #**	**WORK PERFORMED**
/ /				
/ /				
/ /				
/ /				
/ /				
/ /				
/ /				
/ /				
/ /				
/ /				
/ /				
/ /				
/ /				
/ /				
/ /				
/ /				
/ /				

PREFERRED COMET 31-35 South St Danbury, Ct 06810	**COMET BURNER COMBUSTION REPORT**										
	Customer:								Date:		
	Job Number:									Boiler:	
	Boiler Make:					Burner Serial #:				Hp:	
	Burner Mfg: PUMC					Model: PCG-250-F				Fuel: NGAS	
	Control System: FlexFit-85					Fan Mode: Full-Speed / VSD					
Point	**LF**	**1**	**2**	**3**	**4**	**5**	**6**	**7**	**8**	**9**	**10**
Gas Servo, deg											
FD Fan Servo, deg											
VFD Speed, Hz											
Gas Flow SCFH											
Boiler Outlet (Temp, PSI)											
Burner Manifold Gas Pressure											
Regulated Gas Pressure											
Main Gas Pressure											
Flue Gas Temp											
Stack O2 %, wet											
Analyzer Data	**Combustion Analyzer Model:**						**Analyzer Calibration Date:**				
Analyzer O_2 %, dry											
Analyzer CO_2 %, dry											
CO, ppm, raw											
NOx, ppm, raw											
NOx, ppm, Corr. 3%											
Flue Gas Temp, Deg F											
Comb. Air Temp, Deg F											
Excess Air, %											
Analyzer Efficiency											
Technician Name, Company:											

OVERVIEW OF SAFETY WARNING SYSTEM AND YOUR RESPONSIBILITIES

The safety of you and others depends upon you thoroughly reading and understanding this manual. If you have questions or do not understand the information presented in this manual, **please call Preferred Utilities, or visit www.preferred-mfg.com**.



This is the safety alert symbol. It is used to alert you to potential personal injury hazards. The meaning of this safety alert symbol is as follows: Attention! Become alert! Your safety may be at risk. The message that appears next to the warning describes the hazard, which can be either written or pictorially presented. NEVER remove or tamper with the warning labels, safety devices or guards fitted on the unit.

Preferred Utilities Manufacturing Corporation is NOT responsible for any bodily injury and/or property damage that may result from operation outside of the stated operating conditions for which this unit was intended.

HAZARD DEFINITIONS:



Indicates a hazardous situation, which, if not avoided, *will* result in **death or serious bodily injury.**

Indicates a hazardous situation, which, if not avoided, *could* result in **death or serious bodily injury.**

Indicates a hazardous situation, which, if not avoided *may* result in **minor or moderate bodily injury.**

Indicates a situation that *may* result in equipment-related damage.

HAZARD LEVEL	PICTOGRAM	TYPE	HAZARD EXPLANATION
WARNING		Fire or Explosion	**Failure to follow safety warnings exactly could result in serious injury, death or property damage. Do not store or use gasoline or other flammable vapors and liquids in the vicinity of this or any other appliance.** WHAT TO DO IF YOU SMELL GAS: • Open windows. • Do not try to light any appliances. • Do not touch electrical switches; do not use any phone in your building. • Extinguish any open flame. • Immediately call your gas supplier from a neighbor's phone. Follow the gas supplier's instructions. • If you cannot reach your gas supplier, call the fire department.
WARNING		Electric shock or burn	**High voltages are present in this equipment. Follow these rules to avoid electric shock:** • Use only a properly grounded circuit. A ground fault interrupter is recommended. • Do not spray water directly on burner. • Turn off power before servicing. • Read the owner's manual before using.
WARNING		Overheating	**Should overheating occur:** • Shut off the manual gas control to the appliance. • DO NOT shut off power to the equipment, allow blower to continue running.
WARNING		Carbon Monoxide Poisoning	**Carbon monoxide is a colorless, odorless gas that can kill. Follow these rules to control carbon monoxide:** • Do not use this burner if in an unvented, enclosed area. Carbon monoxide may accumulate. • Do not adjust the pressure regulator. High pressures produce carbon monoxide.

			• Check flue gases for carbon monoxide. This check requires specialized equipment. • Allow only qualified burner service persons to adjust the burner. Special instruments and training are required. • Read the burner manual before using. CARBON MONOXIDE POISONING: Early signs of carbon monoxide poisoning are similar to the flu with headaches, dizziness, weakness, nausea, vomiting, sleepiness, and confusion. If you suspect carbon monoxide poisoning, get outside to fresh air immediately, and then call 911. Some people are more affected by carbon monoxide than others. These include pregnant women, people with heart or lung disease or anemia, those under the influence of alcohol, and those at high altitudes. Propane/LP gas and natural gas are both odorless. An odor-making agent is added to each of these gases. The odor helps you detect a gas leak. However, the odor added to these gases can fade. Gas may be present even though no odor exists.
		Proposition 65 material	This product can expose you to chemicals, including lead, nickel, carbon monoxide and sulfur dioxide, which are known to the State of California to cause cancer or birth defects or other reproductive harm. For more information, go to www.p65Warnings.ca.gov.
		Special Requirements	When contacting Preferred Utilities for service information, please have the burner specification number and model number when calling or writing.

IF ANY INSTRUCTIONS IN THE MANUAL ARE NOT CLEAR, CONTACT PREFERRED UTILITIES MANUFACTURING CORPORATION AT 1-203-743-6741 FOR ASSISTANCE.

Contents

SECTION I: INSTALLATION 8
A. GENERAL 8
B. VENTILATION 8
C. TECHNICAL SPECIFICATIONS 8
D. MOUNTING TO EQUIPMENT 9
E. GAS PIPING 10
F. ELECTRICAL SUPPLY 11
G. BURNER COMPONENTS 11
H. MAIN BURNER INSTALLATION 16
I. EXAMPLE BURNER TEST DATA TABLE 18
J. BURNER ADJUSTMENT 19
K. PRESSURE REGULATOR ADJUSTMENT 20
A. GAS PRESSURE SWITCHES 21
SECTION II: INITIAL START UP 22
SECTION III: OPERATION AND TROUBLESHOOTING 25
A. SEQUENCE OF OPERATION 25
B. WIRING DIAGRAM 29
C. FLAME SENSING WITH EQUIPPED CONTROLS 34
D. TROUBLESHOOTING 34
SECTION IV: SERVICE 38
A. SERVICE SCHEDULE 38
B. COMPONENT REPLACEMENT SCHEDULE 38
C. BURNER HEAD AND ELECTRODE/SENSOR ASSEMBLY 38
D. AIR PROVING SWITCH 40
E. COMBUSTION AIR BLOWER AND MOTOR 40
F. GAS PRESSURE SWITCHES 41
SECTION V: TECHNICAL INFORMATION 42
A. NUISANCE LOCKOUTS/FLAME SENSING PROBLEMS 42
SECTION VI: SPARE PARTS LIST 44
SECTION VII: END-USER INSTRUCTIONS 45

SECTION I: INSTALLATION

A. GENERAL

Installation of these power gas burners must conform to local codes, or in their absence, the National Fuel Gas Code, ANSI Z223.1/NFPA 54.

In CANADA, "The equipment shall be installed in accordance with the Provincial Installation Requirements, or in their absence, the CGA B149.1 and B149.2 Installation Codes shall prevail." Authorities having jurisdiction should be consulted before installations are made.

ANSI or local installation code compliance is the sole responsibility of the qualified installer.

B. VENTILATION

The Preferred Comet burner models covered by this manual shall not be installed in an appliance located where normal air circulation or infiltration is limited in providing all the air necessary for proper combustion.

When the heating appliance is installed in a tightly closed room without ventilation openings to outdoors, or other rooms, provisions shall be made for supplying air for combustion through special openings, one near the floor line and the other near the ceiling. Each is to be sized based on one square inch (645.2 mm^2) or more of free area each 1,000 BTU input per hour.

C. TECHNICAL SPECIFICATIONS

TABLE 1: TECHNICAL SPECIFICATIONS

Technical Data	PCG-250-F
Min. Burner Output in MMBTU	1.58
Min. Burner Output in MMBTU w/VSD	8.52
Max. Burner Output in MMBTU	9.40
Max. Burner Output in MMBTU (0.2" static)	10.30
Gas Type	Natural Gas, LP Gas
Regulated Gas Pressure	24"wc
Gas Supply Pressure	45"wc
Excess Air, %	20%
RDL	8.5"
Turndown	6:1
Turndown w/ VSD	11:1
Method of Operation	Linkage-less Modulation
Main Voltage	120 VAC
Motor Voltage	230/460Vac, 3-ph
Full Load Amps	23.8/11.9
Electric Motor Power hp (kW)	10 (7.5)
Flame Sensor Input	Flame Rod or UV Scanner
Burner Management System	FlexFit-85
NOx Limit ppm	70

D. MOUNTING TO EQUIPMENT

Mount the burner to the intended application by using 4 bolts within the intended slots. If new mounting holes are needed, use the flange mount (Figure 1 shown below) as a template.

It is required that the burner air tube be at least flush with the inner refractory wall of the chamber and may protrude into the chamber by up to 1 inch past the refractory wall. There is no specific shape required for the transition of the refractory around the burner tube.

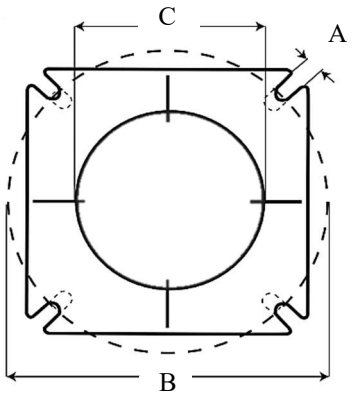

Mounting Pattern and Locations
Figure 1

A	B	C
0.47”	12.91”	10.24”

D.1 MOUNTING GAS JACKET ON APPLIANCE

The connection plate must be prepared according to the dimensions specified for the boiler connection dimensions. The gas jacket may be used as a template.
Screw the gas jacket to the boiler using four fastening screws with washers.

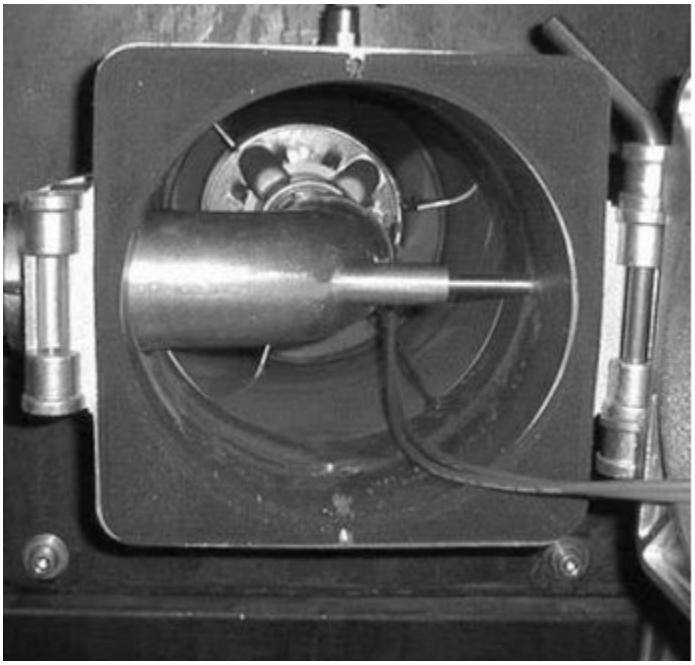

D.2 MOUNTING THE BURNER HOUSING ON THE GAS JACKET
Position the burner housing in the gas-jacket hinge and secure it with a rod. The burner is now in the service position.

Attach the ignition and ionization cables to the ignition and ionization electrodes.

CAUTION: Carefully swing the burner closed. DO NOT pinch electrical cables.

Insert the second mounting rod into the hinge. Tighten the screw at the top to secure the burner in position.



E. GAS PIPING

NOTE: ALL PIPING MUST COMPLY WITH STATE AND/OR LOCAL CODES. THE AVAILABLE GAS SUPPLY PRESSURE MUST BE WITHIN THE MINIMUM AND MAXIMUM PRESSURES SHOWN IN THE BURNER SPECIFICATIONS. IF THE GAS SUPPLY PRESSURE EXCEEDS THE MAXIMUM, AN INTERMEDIATE MAIN GAS REGULATOR MUST BE INSTALLED UPSTREAM OF THE MAIN GAS MANUAL SHUTOFF VALVE.

NOTE: FAILURE TO INSTALL THE INTERMEDIATE GAS REGULATOR WILL RESULT IN GAS LEAKAGE FROM BURNER GAS VALVE.

Use new black iron pipe and malleable fittings free from burrs and defects. Use pipe joint compound resistant to LP gases.

A 1/4" NPT pressure port accessible for test gauge connection must be added by the customer for determining gas supply pressure to the burner. Test new supply piping for leaks.

F. ELECTRICAL SUPPLY

The installation must be wired and grounded in accordance with local codes or in their absence, with the National Electric Code ANSI/NFPA No. 70-2002 or latest edition.

In CANADA, all wiring shall be done in accordance with the Canadian Electrical Code.

G. BURNER COMPONENTS

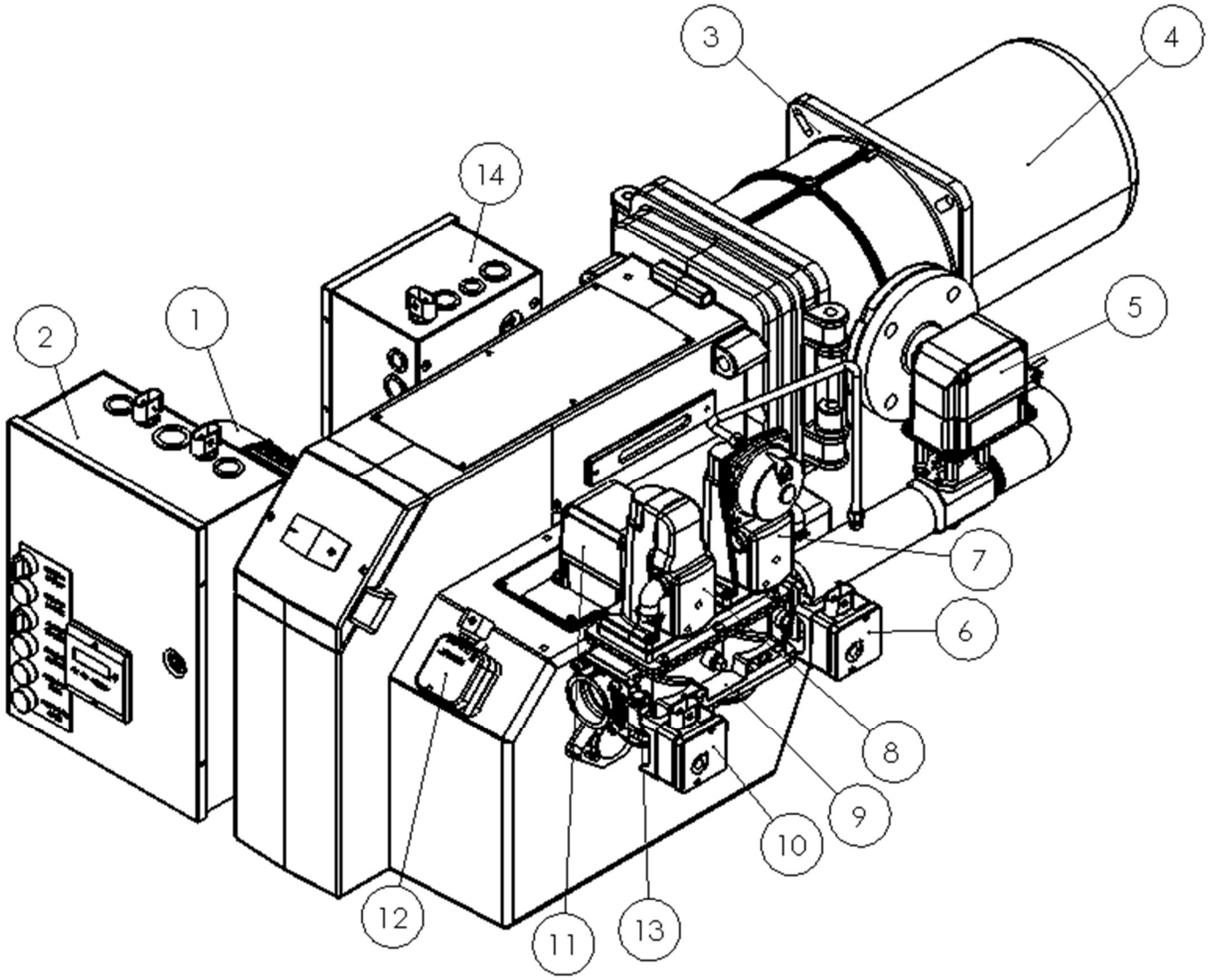

1. Motor
2. Remote Electrical Box
3. Mounting Flange
4. Air Tube
5. Damper Motor - Gas
6. High Pressure Switch – Gas
7. Regulating Gas Valve
8. Safety Gas Valve
9. Double Valve Body

10. Low Pressure Switch – Gas
11. Damper Motor – Air
12. Pressure Switch – Air
13. Line Pressure Port (Customer Added)
14. Fixed Electrical Box

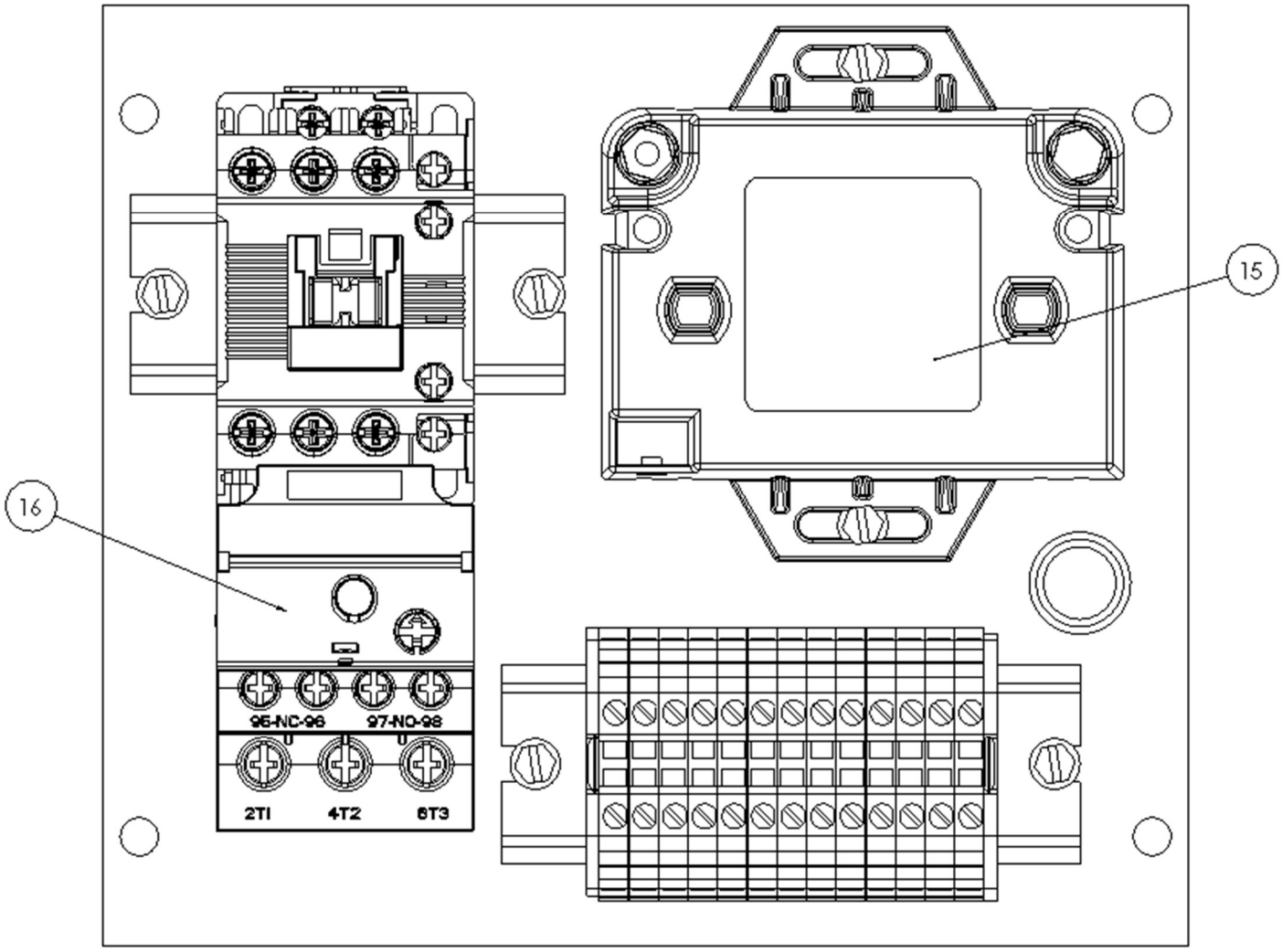

15. Ignition Transformer (Found Within Item #14 – Fixed Control Box)
16. Motor Starter

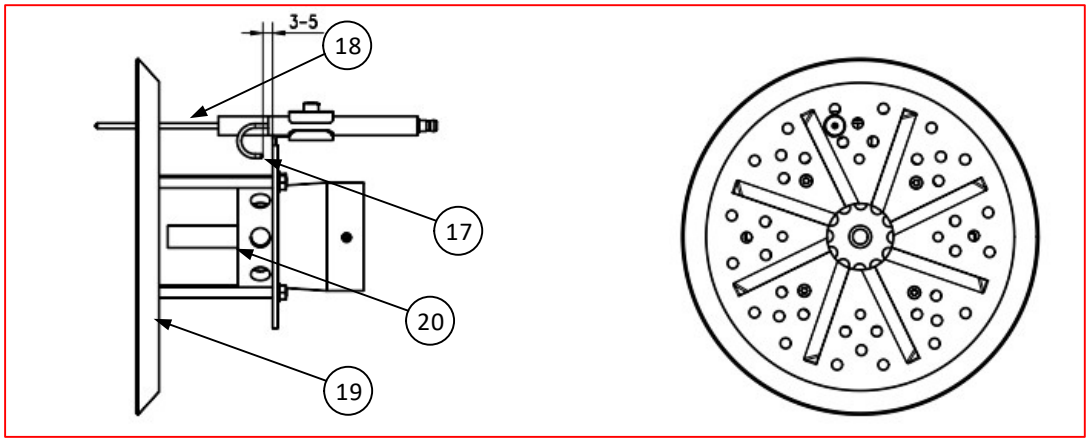

17. Spark Electrode
18. Flame Rod
19. Air Plate
20. Nozzle

G.1 FLEXFIT CONTROL UNIT

The FlexFit-85 control system is a combined burner management system and parallel positioning combustion control unit that can be used with various burner types. This unit is fully adjustable and can be paired with additional auxiliary controls.

The burner management system is operated by the FlexFit LCD display and keypad. The LCD display screen and menu driven operations allow for initial burner parameter setup, keypad with individual control of each output, and data display and diagnostics of the burner system. Passwords are used for various parameter levels to prevent unauthorized access. This fully enables the user to define the optimum choices for their individual application.

G1-1 PRE-REQUISITES FOR BASIC FLEXFIT SYSTEMS

Before the burner can be classified as in good working condition, there are various pre-requisites that must be met for the FlexFit control, burner, and application.

1. Burner must be in good condition, meaning:
    a. The head must not be melted, cracked, or otherwise damaged.
    b. If applicable, the UV scanner must be positioned correctly to sight the flame.
2. Actuators must be mounted properly. Specific attention must be given to:
    a. Actuator shafts must accommodate for angular and parallel shaft misalignment.
    b. Have little to no backlash.
    c. Be robust enough to absorb torque applied (3-ft/lbs) to the actuator without causing damage.
    d. The actuator mounting brackets must be rigid enough to prevent amplifying burner vibration.
    e. The actuator mounting brackets must also not distort under torque applied.
3. All wiring to and from the FlexFit control meets applicable local and national standards.
    a. The voltage supplied to the FlexFit control must be within 102VAC and 132VAC and 60Hz.
4. Fuel supply must be sufficient to support high fire operation. The gas train must be sized properly.
5. A gas analyzer that has been calibrated must be used for setting proper combustion.

G.2 SM-05 DAMPER MOTOR REPLACEMENT AND SETUP

The BMU-SM-15 damper motors, with programmable operation direction, are used on the burner to control both gas and air volume. Both the fuel and air servos will be shipped pre-stroked and calibrated for the air damper and fuel valve. Below is the servo setup procedure if an adjustment needs to be made in the field or if a servo is being replaced:

1. Set Servo address and function, if not already correctly set. Air Servo is address 0, Gas servo is address 1.

2. Set servo travel limit switches:
   - Remove J11 to enable the servo manual CW and CCW pushbuttons.
   - Using the CW and CCW buttons on the servo board, move the servo to its fully CW/CCW limits.
   - IF either limit needs to be changed, identify which rotary cam needs to be adjusted to change the servo's CW or CCW stroke limit.
   - Rotate the cam as shown below until the desired stroke limit is reached.
   - Use the pushbuttons to verify the desired end of travel position.
   - Make sure that the servo is NOT driving into a mechanical hard stop on the damper or valve.
   - Re-Install J11 after making sure there is no binding at either end of travel.

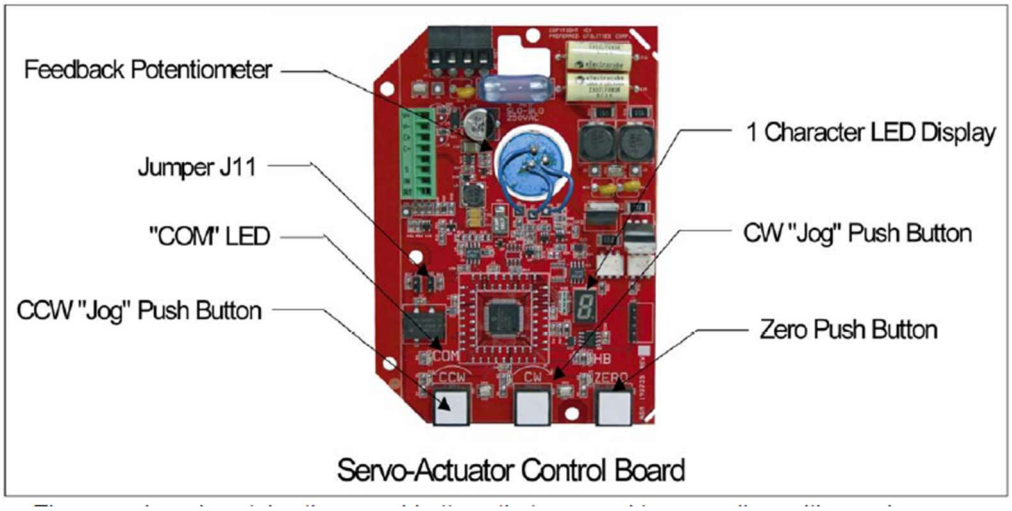

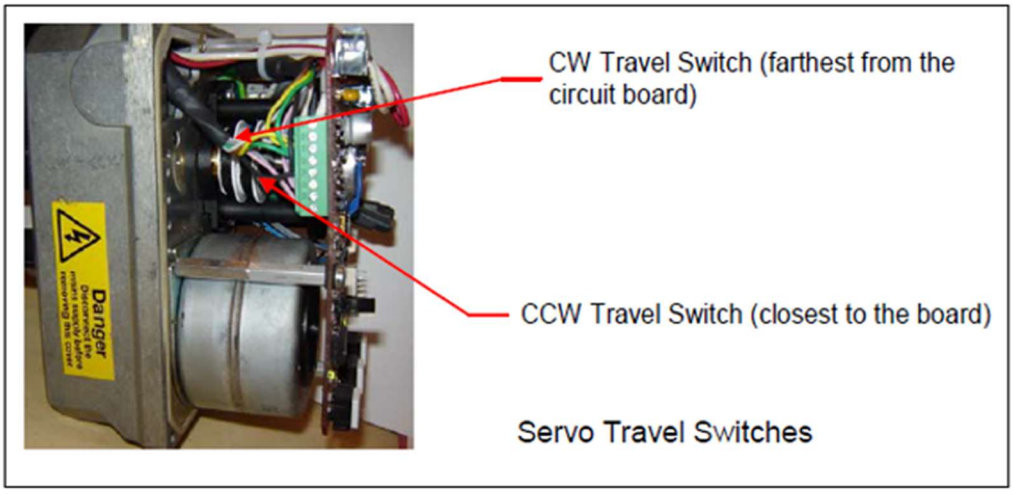

Servo Board and Counterclockwise vs. Clockwise Rotation

Figure 2

3. Perform a Zero Calibration to set the servo's zero-degree ("closed") position and "open" travel direction.
    - Navigate to Main Menu > Setup > Servo Setup > Zero Calibration.
    - For the servo you want to zero, select the correct address and set "Zero Cal" to ENABLE. The servo ZERO LED will start to blink.
    - Jog the servo all the way to the fully closed position (CW or CCW depending on installation/function).
    - The ZERO LED should be either blinking or on continuously. Press and hold the servo ZERO button, and the ZERO LED will turn off. While still holding down the ZERO button, press the closed direction button (CW or CCW). Hold both buttons down until the ZERO LED turns back on and remains on. Make sure the correct button was pushed for the Zero direction, otherwise the servo is not zeroed.
    - Release both buttons.
    - Repeat the above steps for each servo.
    - Exit the Zero Calibration menu.

4. Perform a Seek Limits to complete servo setup.
    - Navigate to Main Menu > Setup > Servo Setup > Seek Limits.
    - For each servo in the daisy chain, set "Seek Limits" to START. Optionally, set "Seek All" to START if you want to seek limits for all servos. The LCD touchpad will read "Seeking." The servo will move back and forth a couple of times to self-calibrate its open and closed limits.
    - When you have finished the seek limits process for each servo, the display will scroll "No Errors". From the Seek Limits screen, scroll down until you see "Closed Limit" and "Open Limit". The numbers you see are the closed and open limits for each servo (in degrees). All the curve points you enter during commissioning need to be within these limits and must be a minimum of 2 degrees away from these limits. They should be recorded on the "Burner Combustion Report" and referenced during combustion tuning when curve points are entered.



WHEN REPLACING A SERVO, THE NEW SERVO WILL SHIP WITH DEFAULT ADDRESS AND OPEN/CLOSED LIMITS SETTINGS. THIS MUST BE SETUP ACCORDING TO THE ABOVE STEPS BEFORE THE BURNER CAN RUN NORMALLY. WHEN A SERO IS REPLACED, ALL PURGE, IGNITION, AND CURVE POINTS WILL NEED TO BE RE-VERIFIED BEFORE THE BURNER CAN OPERATE IN AUTOMATIC OUTSIDE OF COMMISSION MODE.

G.3 FLEXFIT DISPLAY

F.3-1 EXPLAINATION OF DISPLAY AND BUTTONS

Button/Icon	Function
C (Commission)	The FlexFit is in Commissioning Mode. When in Commissioning Mode, all outputs are manually controlled by the user. For editing of parameters and setting up the fuel/air curve only.
A (Alarm)	Indicates there is an active alarm.
L (Lockout)	The controller is in a safety lockout and needs to be reset.
Back/Next	Scrolls between the FlexFit's Home Screens to view operating status and data.
Reset	Resets an active lockout.
Alarm Silence	Silences active alarms and de-energizes alarm horn output. If there are alarms that haven't been "silenced" or acknowledge, the FlexFit LCD screen will flash.
Up/Down Arrows	Used for moving the cursor to the next item on the screen. Pressing both simultaneously will enter the setup menus.
Enter	changes the cursor from select mode to edit mode or to toggle a value on the LCD display. Once in edit mode, press ENTER to save the value being changed and change the display back to select mode.
ESC	Press Escape to cancel an ENTER action.

FlexFit Faceplate Buttons and Icons
Table 2



FlexFit LCD & Keypad
Figure 3

H. MAIN BURNER INSTALLATION

The PCG-250 power gas burners are approved for use with natural gas only.

H.1 GENERAL INSTRUCTION

Installation must be completed in accordance with current instructions. The installer must be familiar with all regulations, so the installation meets the necessary requirements of the local authorities. Installation, assembly, and set up must be performed to obtain optimal function. Only fuels intended for the burner may be used without special permission from Preferred Utilities.

H.2 INSPECTION AND PREPARATION

It is the installer's responsibility to instruct the end user about the functions of the burner and the entire system. The system must be maintained following the timeline specified by the service schedule found in SECTION IV - SERVICE. If the burner is in an unclean environment, cleaning and service should be done on a more frequent schedule. Check that the overall burner size and capacity meet that of the intended application.

H.3 GAS AND ELECTRIC CONNECTION

To maintain operational safety, there are a few points that must be considered. The burner and its components must also be approved for the specified gas pressure. All installations for the burner must be carried out in accordance with current standards. All gas lines should be installed so that any routine service and maintenance can be easily performed on both the burner and the intended application. Before installation, all electrical connections must be disconnected. This allows the burner installation to be electronically isolated. Connections must be made according to current regulations. Electrical connections must conform to the wiring diagram provided.

I. EXAMPLE BURNER TEST DATA TABLE

NOTICE

THE BELOW TABLE IS MEANT AS A GENERAL GUIDELINE FROM PREVIOUS BURNER SETUP DATA. SETTINGS FOR EACH SPECIFIC APPLICATION WILL VARY. FOLLOW DIRECTIONS IN THE INITIAL STARTUP SECTION OF THIS MANUAL WHEN SETTING THE BURNER UP FOR THE FIRST TIME.

TABLE 3: PCG-250 WITH 2"" GAS LINE
(Siemens VGD 2" Double Valve Body with SKP15 and SKP25 Regulators)

PCG-250			**Natural Gas: 1027 btu/cu ft**		
Burner Output [MMBTU]	Air Damper Position [degrees]	Gas Servo Position [degrees]	Manifold Gas Pressure ["wc]	Regulated Pressure ["wc]	Stack Excess O2 [wet O2%]
1.58	0.5	21.0	1.0	23	10.0
2.29	1.8	26.5	2.0	23	6.8
3.06	5.0	31.0	3.0	23	4.7
3.91	9.0	36.5	4.0	23	3.6
4.74	14.5	41.0	6.0	23	3.7
5.49	18.5	45.0	8.5	23	3.4
6.24	24.0	48.5	10.5	23	3.3
7.09	31.0	53.5	13.5	23	3.3
7.89	41.0	59.0	16.5	23	3.4
8.66	58.0	65.5	19.0	23	3.2
9.40	80.0	76.0	22.0	23	2.7

J. BURNER ADJUSTMENT

J.1 BURNER HEAD ADJUSTMENT

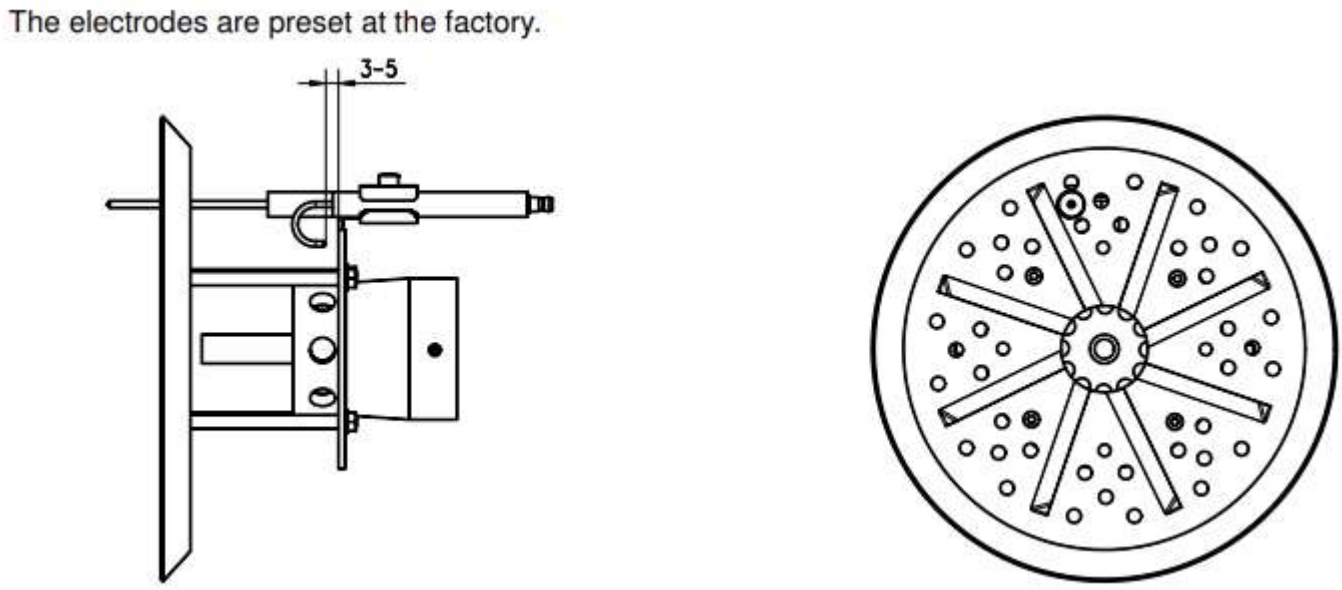

Figure 4: Burner Head Adjustment

J.2 AIR DAMPER ADJUSTMENT:

The air damper adjustment is programmed electronically in the settings of the FlexFit and may vary by application. When in Commission Mode, go to Main Menu >> Curve Commissioning >> Set Curve Points and use the up/down arrows of the FD Damper output command to set the desired damper position for the Standby, Purge, and Ignition points.

J.3 BURNER MOUNTING:

Utilizing the integral mounting flange, fasten the burner to the heating appliance as specified by the appliance manufacturer using either the provided gasket or installer supplied appropriate material to ensure gas tight seal. The burner can be mounted horizontally or vertically, but should not be inverted.

J.4 GAS TRAIN CONNECTION:

The VGD Double Valve Body has arrows on the housing. The arrow should be pointing in the intended direction of gas flow. When making connections that utilize NPT threads, use pipe joint compound that is resistant to the effects of LP gases. Using new black iron pipe and malleable fittings, connect the gas supply piping to the inlet of the gas train. Refer to SECTION I-D. GAS PIPING.

NOTICE

The gas train, and all its safety components, should be leak tested after installation. By installing a ¼" NPT fitting within the VGD valve body, it is possible to isolate and test the gas valve. The remaining train including all safety components, should be tested for leaks and functionality at regular intervals.

NOTICE

GAS TRAINS ARE HEAVY, CAUSING STRESS TO THE GAS CONNECTIONS ON THE BURNER. IT IS SUGGESTED THE GAS TRAIN BE SUPPORTED TO MINIMIZE THE POTENTIAL FOR STRESS ON THE BURNER'S PIPING CONNECTIONS.

J.5 ELECTRICAL CONNECTIONS:
The installation must be wired and grounded in accordance with local codes or in their absence, with the National Electric Code ANSI/NFPA No. 70-2002 or latest edition.

In CANADA, all wiring shall be done in accordance with the Canadian Electrical Code.

J.6 SAFETY SYSTEM
The safety system (Including hatches, doors, water levels, pressure, and temperature systems) must be installed according to current regulations.



LABEL ALL WIRES PRIOR TO DISCONNECTION WHEN SERVICING CONTROLS. WIRING ERRORS CAN CAUSE IMPROPER AND DANGEROUS OPERATION. VERIFY PROPER OPERATION AFTER SERVICING.

NOTICE

IF ANY OF THE ORIGINAL BURNER WIRING MUST BE REPLACED, IT MUST BE REPLACED WITH #18 AWG 105° C WIRE OR EOUIVALENT.

K. PRESSURE REGULATOR ADJUSTMENT

The pressure regulating gas valve is preset to 24 inches water column manifold pressure. This may be field adjusted while the burner is in operation. Refer to Table 3 for pressure requirements.

When adjusting the regulator pressure according to that specified in Table 3, remove the regulator cap for access to the slotted adjustment screw. Turning the screw counterclockwise reduces burner inlet (regulated) pressure, clockwise increases the pressure. Reference Figure 5 for clarification.

NOTE: MANIFOLD PRESSURE ADJUSTMENTS CAN ONLY BE MADE WITH THE BURNER FIRING AND THE GAS ON.

The pressure tap for regulated pressure measurement is located on the back side of the regulator. Use a manometer or dial type pressure gauge to read pressure.

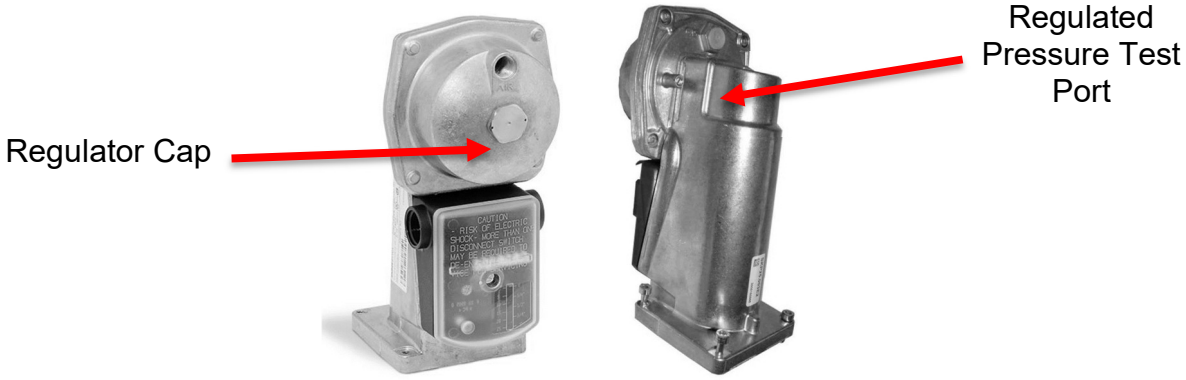

Regulating Gas Valve
Figure 5

A. GAS PRESSURE SWITCHES

L.1 MOUNTING

All switches can be mounted in either horizontal or vertical position. Switches should be reasonably level but do not require accurate leveling. Switches have been factory calibrated and tested for leaks. However, it is recommended that the switch body, gas pipe inlets and connections be tested for leaks after burner installation.

L.2 OPERATION

Low Gas Pressure Models: Low gas pressure switches break the electrical circuit upon pressure drop at the point when gas pressure becomes lower than the indicated set pressure. Switch models used for both high and low gas pressure are self-resetting and only require that gas pressure returns to the required range prior to resetting any control faults.

High Gas Pressure Models: High gas pressure switches break the electrical circuit when pressure rises above the indicated preset pressure.

Range Adjustment - All Models: To adjust gas pressure cut-off setting, remove the cover. Turn the range scale adjustable knob to increase pressure setting or decrease pressure setting. Install cover and tighten the cover screws to prevent tampering. Proper adjustment of the high and low gas pressure switches is explained in SECTION II – INITIAL START UP.

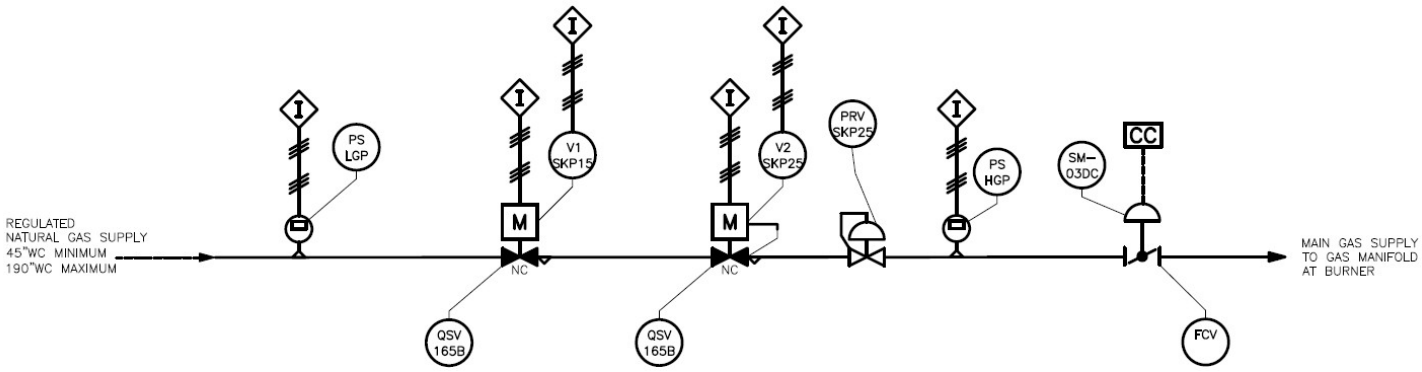

Gas Train P&ID
Figure 6

SECTION II: INITIAL START UP

1. Please note the applicable sequence of burner/primary gas control operation, gas pressure switches, etc. in SECTION III - OPERATION AND TROUBLESHOOTING before proceeding.
2. Lay out combustion test equipment, manometers, stopwatch, DC micro-amp meter, and other miscellaneous tools as needed.
3. Temporarily remove the covers from the High and Low Gas Pressure Switches and set the switches using the dials. The High Gas Pressure Switch should be set to the highest inches W.C. setting, as an initial starting point. The Low Gas Pressure Switch should be set to the lowest inches W.C. setting, as a starting point. **NOTE: THESE SETTINGS MUST BE RE-ADJUSTED AFTER THE BURNER IS IGNITED.**
4. Open all necessary valves one at a time, checking any new gas pipe installations for gas leaks with soapy solution or leak detector until you have tested all new pipe leading to the burner. Do not use an open flame to test for gas leaks.
5. Loosen the pressure port screw and attach a manometer to the pressure tap on the back side of the Gas Regulator (Figure 5).
6. Apply 120V power to burner control panel.
7. On the FlexFit LCD/Keypad, navigate to: Main Menu >> Password >> Enter Password
8. Enter "9999" as the password. This allows for setup of the controller parameters, servos, and combustion curves. The password times out after 6 hours or if the power is removed from the controller. Once logged in, set a new password for the controller. If unable to log in, contact Preferred Utilities tech support at (203)-743-6741 for a temporary password.



SETING THE FLEXFIT WITH A PASSWORD OF 9999 LOCKS OUT SETPOINT ADJUSTMENT WHEN NOT LOGGED IN. SET THE FLEXFIT PASSWORD TO SOMETHING ELSE TO UNLOCK OPERATOR SETTINGS WHEN NOT LOGGED IN.

9. The FlexFit will arrive with pre-stroked and calibrated servos and pre-set Purge and Ignition points. If a servo needs to be setup, see Section I.G.2 of this manual for servo setup steps.
10. Set any site-specific parameters that may vary from the standard FlexFit settings for Comet burners. Some parameters of note:
    - **a.** 1.1.3 Purge Seconds
    - **b.** 1.2.2 Post-Purge Seconds
    - **c.** 2.3.1 Oxygen Analyzer Option
    - **d.** 3.1.1 Local Firing Rate Control Source
        - *i.* Default is set to 0-25 Psi PID if a different scaled transmitter is being used, select the correct option or enter a custom range.
    - **e.** 3.2.6 Rate Local Setpoint
    - **f.** 3.4.4 Enable Remote Mode
    - **g.** 3.4.6 Remote Modulation
    - **h.** 3.6.1 Cold Start Warmup Option
    - **i.** 4.1.1 Draft Control Option

NOTE: SEE FLEXFIT-85 INSTRUCTION MANUAL FOR FULL LIST OF PARAMETERS WITH DESCRIPTIONS OF AVAILABLE OPTIONS.

11. On the LCD/Keypad, navigate to: Main Menu >> Curve Commissioning >> Commission Mode and press Enter to enable commissioning mode. This must be done before any fuel/air curve points can be adjusted.

NOTE: IGNITION POINT IS NOT LOW FIRE AND IS NOT INCLUDED IN THE 11 AVAILABLE CURVE POINTS. IGNITION IS THE SETPOINT THE BURNER USES TO INITIALLY LIGHT BEFORE RELEASING TO MODULATE ON THE FUEL/AIR CURVE. P1 IS OFTEN LOWER THAN THE IGNITION SETPOINT.

12. Turn the burner start switch to the ON position.
13. The FlexFit will go through Servo Check and Purge, then will command the servos to go to their ignition positions. At this point, the FlexFit will display "Ignition Position Not Verified".
14. Navigate to Main Menu >> Curve Commissioning >> Verify Points. Move the cursor to "S". Pressing Enter will verify ignition and the burner will attempt a lightoff. After this point, the Fuel/Air outputs can be manually adjusted with the up/down keys for the respective output.
15. If the lightoff point needs to be adjusted, shut the burner off and navigate to: Main Menu >> Curve Commissioning >> Set Points >> Set Ignition. Making a change to this point will "un-verify" the ignition point and it will need to be re-verified during the next attempt to start the burner.

NOTE: ON NEW GAS LINE INSTALLATIONS, AIR MAY BE TRAPPED IN THE GAS LINE; THE BURNER MAY EXPERIENCE LOCKOUTS UNTIL ALL THE AIR IS PURGED FROM THE LINES.

16. Once a good lightoff is achieved, allow the boiler to warmup then walk the burner up to high fire and set up to 11 fuel/air curve points.
   a. Use the up/down arrows for the fuel and air outputs on the FlexFit keypad to position the servos.
   b. With a stack combustion analyzer, verify that a safe fuel/air ratio has been set.
   c. With the LCD cursor, press Enter on the "S" on the LCD to set a curve point.

NOTE: TO PREVENT UNINTENDED OPERATION, IT IS IMPORTANT TO ADJUST THE AIR AND FUEL ALTERNATELY IN SMALL INCREMENTS.

17. Guidelines for setting a fuel/air curve in the FlexFit:
   a. The fuel valve must have a minimum distance of at least 1.0 degrees between each curve point. Pressing store when the fuel valve is within 1 degree of an existing point will overwrite that existing point.
   b. There must be a minimum of 3 consecutive set and verified curve points stored in the controller in order to exit commission mode and let the burner modulate in automatic.
   c. There must be a minimum of 5.0 degrees separation for the fuel valve setpoint of the highest and lowest verified curve points.
   d. It is good practice to not set a curve point within 1.5 degrees of a servos open or closed limits. To view the open/closed calibrated limits for each servo, go to: Main Menu >> Setup >> Servo Setup >> Seek Limits, then scroll down to see the open and closed limits of the selected servo.

18. Fine-tune the fuel/air curve using a combustion gas analyzer to verify a safe excess O2 level and minimal CO emissions.

NOTE: ALWAYS USE RELIABLE COMBUSTION TEST INSTRUMENTS. BEING PROFICIENT IN THE USE OF THESE INSTRUMENTS AND INTERPRETING THEIR DATA IS NECESSARY FOR SAFE, RELIABLE AND EFFICIENT BURNER OPERATION.

19. Check combustion using flue gas analysis instruments. Set the burner to about 20% excess air at high fire and check that good combustion is obtained. Check the actual gas flow on the gas meter to ensure that the correct input power is achieved. **Do not fire the burner above its maximum input rating or the maximum input rating of the boiler.**

Gas Type	Excess Air Flue Gasses (%O2)
Natural Gas	4 ± 1
LP Gas	

20. Adjust the High & Low Gas Pressure Switches according to actual firing conditions. For close burner control, the High Gas Pressure Switch should be set at approximately 1 in. W.C. above the set regulator pressure and the Low Gas Pressure Switch should be set approximately 2 in. W.C. above the regulated pressure or at 80% of the gas supply pressure. Nuisance lockouts will occur if the switch settings are too close to the regulator setting and if fluctuations in gas pressures occur. Re-attach switch covers.

21. Record the installation data, the combustion readings, etc., and affix to this manual, or the burner and/or appliance. Space has been provided at the beginning of this manual on Page 2 for start-up notes, dealer's name, address, telephone number, as well as the date of installation.

22. Once the combustion curve has been set up and verified, exit Commission Mode and watch the burner run in automatic in either Local or Remote mode depending on the application. If using a local firing rate PID, tune the PID gain and integral settings as the burner modulates with the plant load.

SUGGESTION: ALL NEW INSTALLATIONS SHOULD BE RE-INSPECTED FOR PROPER COMBUSTION AND BURNER OPERATION AFTER 1-2 WEEKS OF NORMAL OPERATION.

For normal start and shutoff procedure, refer to the "End-User Instructions" in the back of this manual.

TO RESTART THE BURNER AFTER A FLAME FAILURE, Push the reset button on the FlexFit faceplate. The burner should relight after going through the servo check and purge sequence again. If problems persist, refer to SECTION III – OPERATION AND TROUBLESHOOTING.

To stop the burner in the event of an emergency, remove power from the main electrical disconnect, turn "off" any added external "on/off" switch, and close any manual gas ball valve.

A. SEQUENCE OF OPERATION

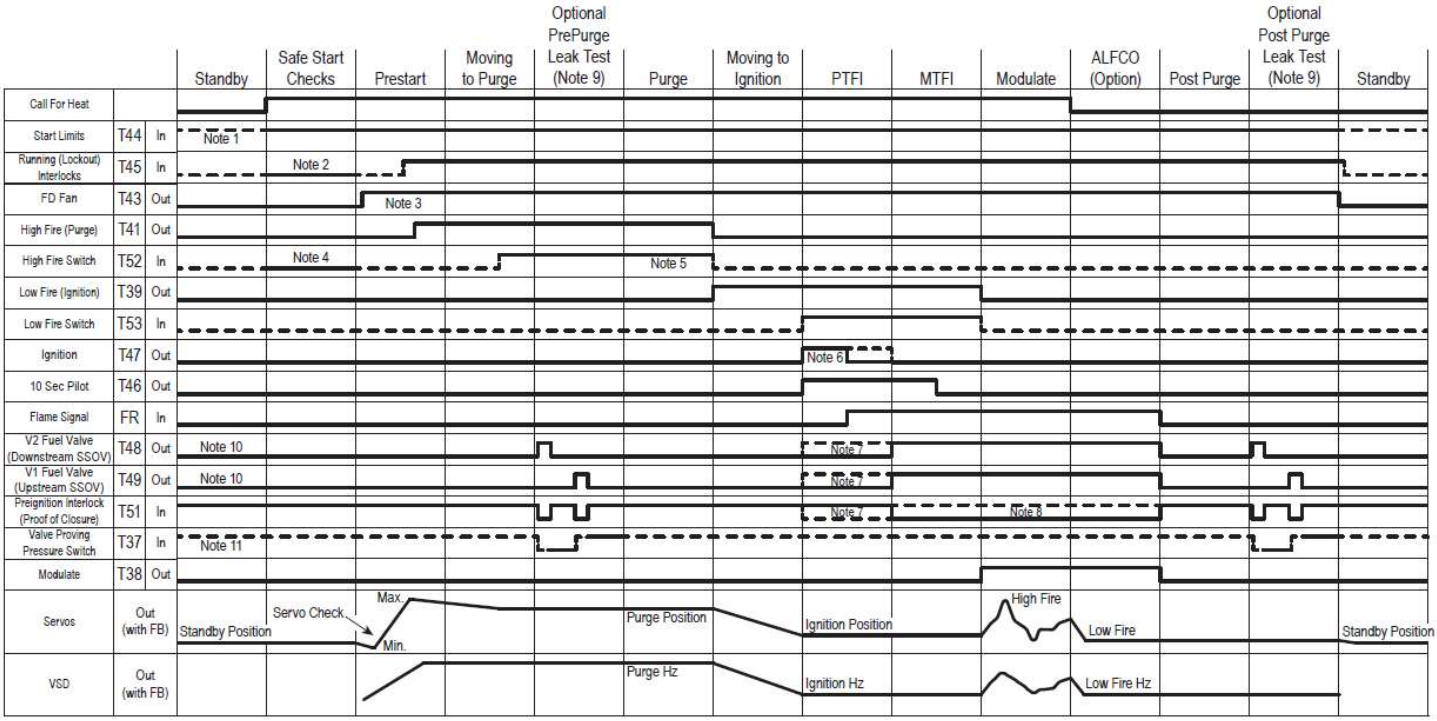

Figure 7: FlexFit Timing Diagram

TIMING DIAGRAM NOTES:

1. If using call for heat, safe start checks will begin once both the start limits (T44) input and the call for heat are made. If not using call for heat, safe start checks will begin once the start limits (T44) input is made.
2. Must be low during safe start checks if parameter "P1.1.4 MAF/Run Interlocks Safe Start Test" on page 4-59 is enabled.
3. The FD fan will start after the time delay set by parameter "P1.2.3 FD Fan Start Delay" on page 4-59.
4. Must be low during safe start checks if parameter "P1.1.5 PAF Switch Installed" on page 4-59 is set to Yes.
5. During the purge cycle, the high fire switch (purge interlock) can be open for no more than 30 seconds (cumulative). The purge timer does not run while open.
6. Parameter "P1.3.2 PTFI Ign Xfmr Sec" on page 4-61 sets the PTFI seconds.
7. If direct spark ignition (DSI) is being used, the main fuel valves will open during PTFI and the MTFI state will be skipped.
8. If no main fuel valve(s) (SSOVs) have proof of closure, jumper 120 VAC to (T51) and set parameters "P1.2.10 Fuel 1 Proof of Closure Installed" and "P1.2.11 Fuel 2 Proof of Closure Installed" to No.
9. If leak testing is disabled or not required for the selected fuel, this state is skipped. The optional gas leak test procedure requires both start and running interlocks to be made; therefore, the call for heat option must be used to allow post purge leak testing to occur. For more information on the optional gas leak test and for timing calculations, see section "Gas Valve Leak Test Option" on page 4-61, and parameters "P1.3.9 Fuel1 Leak Test Option" and "P1.3.11 Fuel2 Leak Test Option".
10. If leak test is disabled, (T49) energizes all main fuel SSOVs and (T48) remains deenergized (is not used). See section "Burner Management System (Flame Safeguard) Installation" on page 2-14, for typical wiring diagrams.
11. 120 V (made) = high pressure; 0 V (open) = low pressure.

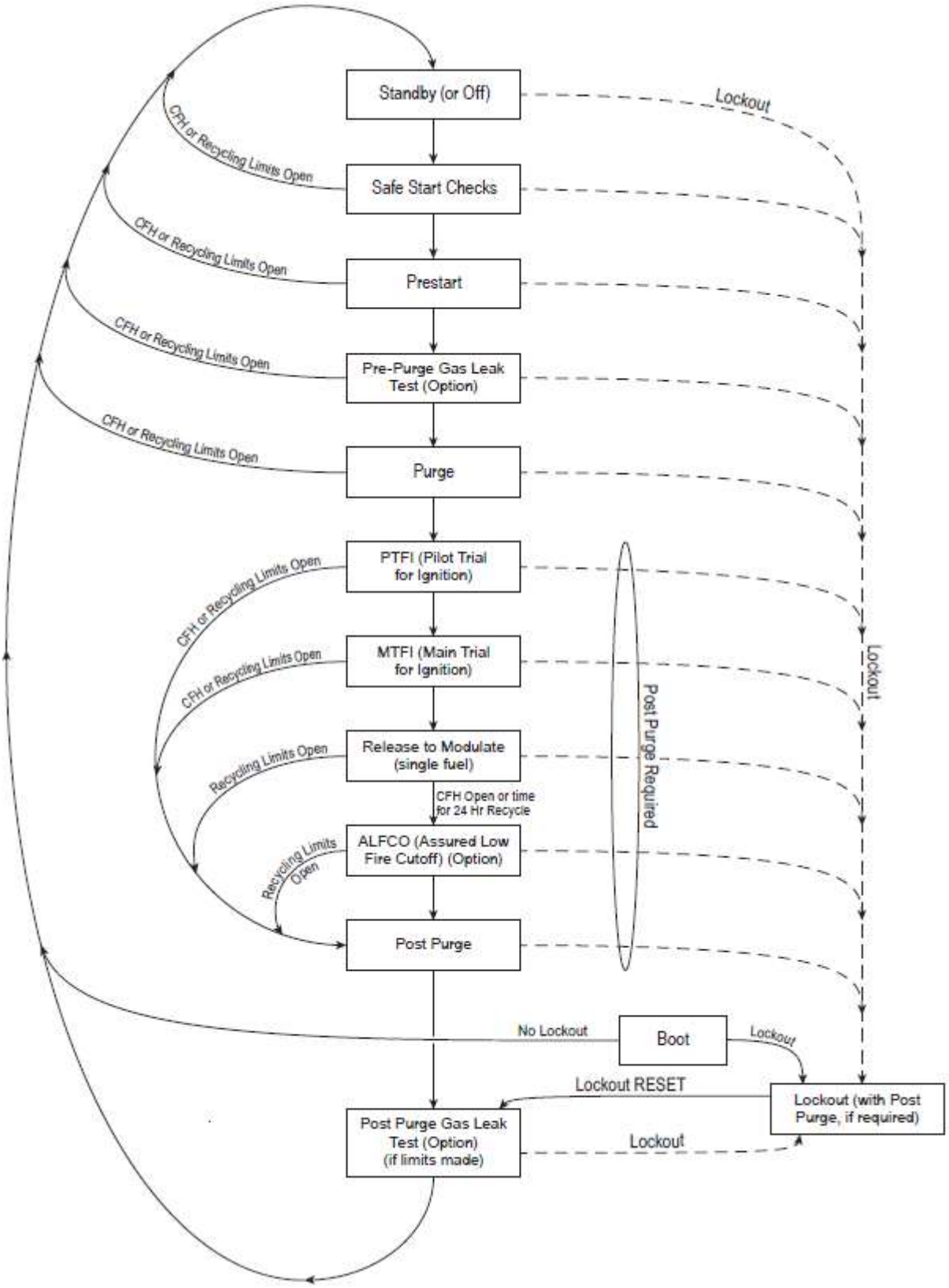

Figure 8: FlexFit Burner Management State Machine

Boot

When power is initially applied to the FlexFit, it will perform initial self-checks on itself and boot into either the standby state or the lockout state, depending on its state prior to losing power.

Standby

During the standby state, the BMS will command all fuel/air devices to their standby positions and ensure fuel bus power and safety relays are deenergized. During the standby state, a technician or engineer can change restricted and non-restricted parameters, and the current fuel selection may be changed.

Standby is the state from which the BMS starts an operating sequence following a call for heat with the operating limits (33-44) input energized

Safe Start Checks

During safe start checks, the fuel/air ratio curve data are verified, parameter values are checked for conflicts, and minimum/ maximum limits are checked. If all fans are off, the non-recycling limits (44-45) and high fire switch (purge interlock) (33-52) switches are verified to be open.

The BMS initiates a lockout if the fuel valve Proof of Closure Switches (POCS) (if installed) are detected as open or if a false flame is detected. If no lockout or other error has occurred, the start sequence is continued.

Prestart

During prestart, all combustion servo calibration data, parameters, and feedback potentiometer alignments are checked by forcing the servos first to their fully closed and then to their fully open positions. The servo for the unselected fuel is not checked.

When the above items have been proven, the combustion servos are sent to the purge position. The start sequence is now on hold until non-recycling limits are made. Then, the BMS will test the safety relay by deenergizing the K1 coil and ensuring there is no power detected on the safety bus.

Purge

Once the purge interlock is satisfied, the purge timer is started. During the purge cycle, the purge interlock can open intermittently but for no more than 30 seconds (cumulative). The purge timer stops counting when a purge interlock is open. If the purge interlocks are open for more than 30 seconds, the FlexFit will lockout. After the purge time is complete, the FlexFit will drive the servos to their ignition positions.

Pilot Trial for Ignition (PTFI)

After the servos are proven in their ignition positions, the ignition transformer and pilot valve outputs are energized. A pilot flame must be proven present before the PTFI times out (10 seconds), or a lockout will result (does not apply to direct spark ignition mode).

Main Trial for Ignition (MTFI)

When the pilot flame is proven, the FlexFit energizes the main fuel valve. The pilot valve and ignition transformer deenergize 10 seconds after the main fuel valve is energized. From this point forward, the main flame must be proven continuously, or a lockout will occur.

Release to Modulate

The FlexFit releases control of the combustion servos (fuel/air ratio control) to the FlexFit-CC. The fuel remains at the ignition position while all other air and FGR devices must move to their corresponding curve positions within 20 seconds, or a lockout will occur. Servo pacing is now enabled. Any servos that are not being used are commanded to the standby position. Based on the process variable (steam PSI or water temperature) to setpoint comparison, a firing rate demand signal is generated that positions the appropriate servos to their proper positions.

Assured Low Fire Cutout (ALFCO) Option

When the FlexFit detects that there is no longer a call for heat and parameter "P1.2.6 Assured Low Fire Cutoff" is enabled, all combustion servos are commanded to the low fire position before the SSOVs are deenergized. If the ALFCO is disabled, the SSOVs close immediately when there is no longer a call for heat.

Post Purge

After the fuel valves have deenergized, the fans continue to operate until the post purge time has elapsed. All combustion devices remain in their last position. All fans and auxiliary outputs are deenergized.

Gas Valve Leak Test Option (Flex Sequence Option Only)

If enabled, when possible, the leak test is performed after the completion of post purge. If the recycling or non-recycling trips open during the leak test, the leak test is postponed and done during the next start-up, after prestart and before purge. Optionally, the leak test can be performed both after post purge and pre-purge.

Lockout

The FlexFit reverts to the lockout state whenever an unsafe or undesirable condition has been detected. The operator must reset the FlexFit before a burner restart can be attempted.

B. WIRING DIAGRAM

GENERAL WIRING NOTES:

1. INSTALLATION AND FIELD WIRING SUPPLIED BY FIELD CONTRACTOR
2. LOW VOLTAGE D.C. WIRING -USE #20 GA. MIN. SHIELDED CABLE - DO NOT RUN IN CONDUIT WITH A.C. VOLTAGE - GROUND SHIELD ONLY WHERE SHOWN - ISOLATE EXPOSED SHIELDS TO PREVENT UNINTENDED CONNECTIONS TO CASE GROUND. LABEL EACH END OF LOW VOLTAGE CABLE.
3. FIELD LINE VOLTAGE A.C. - MINIMUM WIRE GAUGE TO BE DETERMINED BY LOCAL CODE
4. ISOLATE LINE VOLTAGE TERMINALS FROM LOW VOLTAGE TERMINALS.
5. TERMINALS SHOWN MORE THAN ONCE, CONNECT AND WIRE AS SHOWN.
6. WIRING IN CABINET TO BE COLOR CODED AND TERMINATED AT TERMINAL STRIPS FOR ALL FIELD WIRING.
7. REFER TO PROJECT BILL OF MATERIAL FOR EQUIPMENT SUPPLIED BY PREFERRED INSTRUMENTS ITEMS NOT LISTED ARE EXISTING OR SUPPLIED AND INSTALLED BY FIELD CONTRACTOR.
8. ALL WIRING (AC, DC, & SHEILDED CABLE) SHOULD BE COPPER, STRANDED, 150V MIN. AND RATED 60°C MINIMUM.
9. SHIELDED CABLE - ALL 4-20mA/0-5VDC INPUT AND OUTPUT WIRING SHOULD BE 22 GA. MINIMUM, 100% FOIL SHIELD AND HAVE TWISTED PAIRS (BELDEN 8737 OR EQUAL)
10. REFER TO FLEXFIT MANUAL FOR FURTHER INSTALLATION AND WIRING PRACTICES

WIRING:

FACTORY WIRING — — — FIELD WIRING

CABLE

ETHERNET CABLE

TERMINAL LOCATIONS:

XXXX BOILER CONTROL PANEL

XXXX BOILER JUNCTION BOX

XXXX BURNER JUNCTION BOX

XXXX GAS TRAIN JUNCTION BOX

TEST WIRE SIZE INSTALLED IN CONNECTOR	TIGHTENING TORQUE/POUND-INCHES			
	SLOTTED HEAD No.10 AND LARGER		HEXAGONAL HEAD EXTERNAL DRIVE SOCKET WRENCH	
AWG	SLOT WIDTH 0.047 INCH OR LESS AND SLOT LENGTH 1/4 INCH OR LESS	SLOT WIDTH OVER 0.047 INCH OR SLOT LENGTH-OVER 1/4 INCH	SPLIT BOLT CONNECTORS	OTHER CONNECTORS
18 - 10	20	35	80	75
8	25	40	80	75
6 - 4	35	45	165	110

FOR VALUES OF A SLOT WIDTH OR LENGTH NOT CORRESPONDING TO THOSE SPECIFIED THE LARGEST TORQUE VALUE ASSOCIATED WITH THE CONDUCTOR SIZE SHALL BE MARKED. SLOT WIDTH IS THE NOMINAL DESIGN VALUE. SLOT SHALL BE MEASURED AT THE BOTTOM OF THE SLOT.

SLOT LENGTH OF SCREW[a]	SLOT WIDTH OF SCREW-INCHES[b]		SOCKET SIZE ACROSS FLATS	TIGHTENING TORQUE
INCHES	SMALLER THAN 0.047	0.047 AND LARGER	INCHES	POUND-INCHES
LESS THAN 5/32	7	9	1/8	45
5/32	7	12	5/32	100
3/16	7	12	3/16	120
7/32	7	12	7/32	150
1/4	9	12	1/4	200
9/32		15	5/16	275
ABOVE 9/32		20	3/8	375
			1/2	500
			9/16	600

[a] FOR SLOT LENGTHS OF INTERMEDIATE VALUES, TORQUES PERTAINING TO NEXT SHORTER SLOT LENGTH SHALL BE UTILIZED. FOR SCREWS WITH MULTIPLE TIGHTENING MEANS, THE LARGEST TORQUE VALUE ASSOCIATED WITH THE CONDUCTOR SIZE SHALL BE MARKED. SLOT LENGHTS SHALL BE MEASURED AT THE BOTTOM OF THE SLOT

[b] SLOT WIDTH IS THE NOMINAL DESIGN VALUE

[a] FOR SCREWS WITH MULTIPLE TIGHTENING MEANS, THE LARGEST TORQUE VALUE ASSOCIATED WITH THE CONDUCTOR SIZE SHALL BE MARKED. SLOT LENGTH SHALL BE MEASURED AT THE BOTTOM OF THE SLOT

SYMBOLS:

MOTORIZED SHUTOFF VALVE

SOLENOID VALVE

ALARM BELL

ALARM HORN

CONTROL RELAY (100 — RELAY CONTACT LINE REFERENCE)

RELAY CONTACT, NC (101 — RELAY COIL LINE REFERENCE)

RELAY CONTACT, NO

PILOT LIGHT

THERMOCOUPLE

IGNITION TRANSFORMER

OFF DELAY CONTACT, NC

ON DELAY CONTACT, NO

PUSH BUTTON, NC

PUSH BUTTON, MUSHROOM STYLE, NC

OFF DELAY CONTACT, NC

ON DELAY CONTACT, NC

PUSH BUTTON, NO

PUSH BUTTON, MUSHROOM STYLE, NO

FUSE (4A-SLOW — FUSE RATING)

THERMAL-MAGNETIC CIRCUIT BREAKER (15A — TRIP RATING)

SELECTOR SWITCH, NO (OFF / HAND / AUTO / OOX)

SELECTOR SWITCH, NC (OFF / HAND / AUTO / OOX — POSITION LABELS — POSITION INDICATOR O = OPEN X = CLOSED)

LEVEL SWITCH, NO

LEVEL SWITCH, NC

FLOW SWITCH, NO

FLOW SWITCH, NC

LIMIT SWITCH, NO

LIMIT SWITCH, NO HELD CLOSED

PRESSURE SWITCH, NO

PRESSURE SWITCH, NC

TEMPERATURE SWITCH, NO

TEMPERATURE SWITCH, NC

LIMIT SWITCH, NC

LIMIT SWITCH, NC HELD OPEN

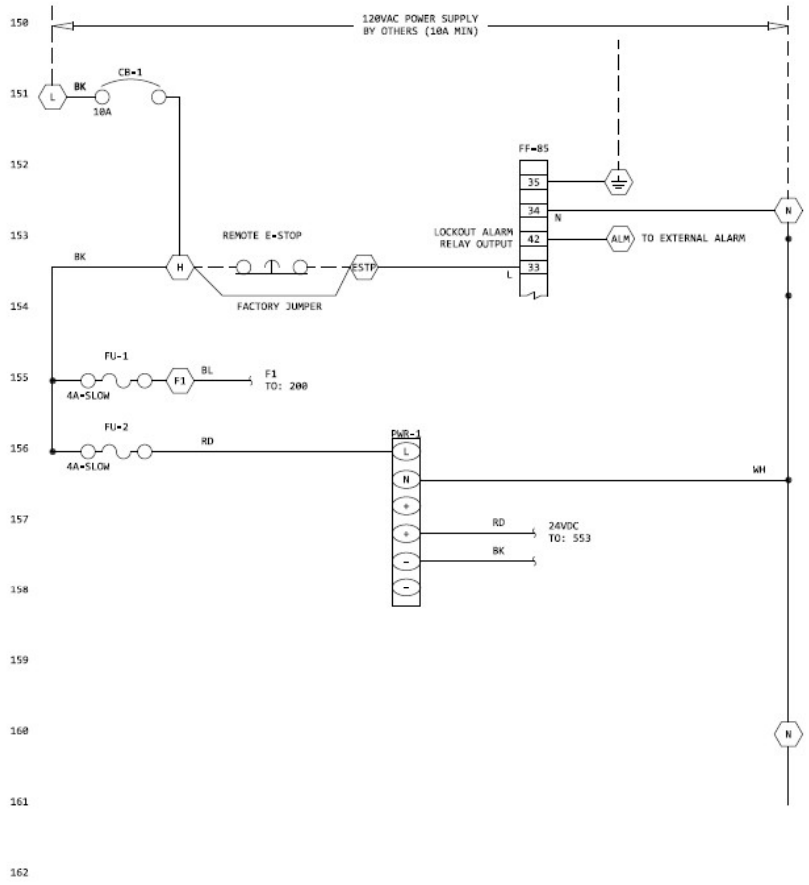

THIS DRAWING IS THE PROPERTY OF PREFERRED UTILITIES MFG. AND IS LOANED SUBJECT TO RETURN UPON DEMAND. TITLE TO SAME IS NEVER SOLD OR TRANSFERRED FOR ANY REASON. INFORMATION CONTAINED HEREIN IS NOT TO BE REPRODUCED OR USED IN ANY WAY DETRIMENTAL TO THE COMPANY. ALL RIGHTS TO THE DESIGN OR INVENTION ARE RESERVED. ALL PRODUCTS OF THE COMPANY SOLD AND ALL SERVICES OFFERED ARE SUBJECT TO THE COMPANY'S WARRANTY AND TERMS AND CONDITIONS OF SALE; COPIES OF WHICH WILL BE FURNISHED UPON REQUEST.

REV.	DATE	DESCRIPTION	BY	APP

PREFERRED UTILITIES MFG CORPORATION
31-35 SOUTH STREET DANBURY, CONNECTICUT
TEL:203-743-6741 FAX:203-798-7313.
WEB.PREFERRED-MFG.COM

SALES ORDER:

JOB NAME:

CUSTOMER:

DRAWING NAME: BOILER CONTROL SYSTEM
FLEXFIT FLAME SAFEGUARD & COMBUSTION CONTROLS
WIRING DIAGRAM

REFERENCED DOCUMENTS:

BILL OF MATERIAL:

DESIGNED BY: DJF : 7/18/2024

DRAWING NUMBER: PCG-FLEXFIT-STD
SHEET: 1 OF 5

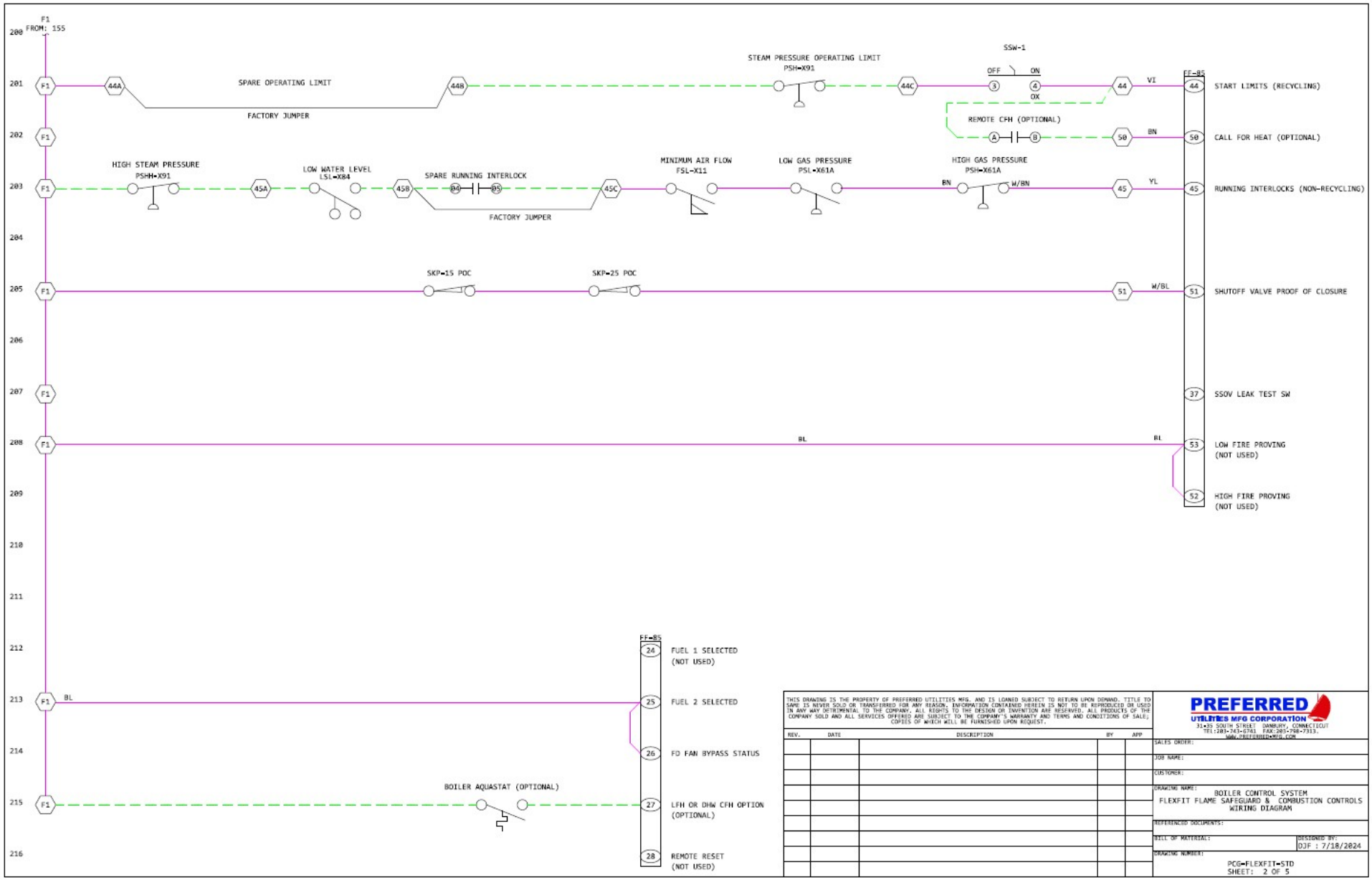
F1
FROM: 155
STEAM PRESSURE OPERATING LIMIT
PSH-X91
SSW-1
OFF
ON
OX
SPARE OPERATING LIMIT
FACTORY JUMPER
REMOTE CFH (OPTIONAL)
START LIMITS (RECYCLING)
CALL FOR HEAT (OPTIONAL)
HIGH STEAM PRESSURE
PSHH-X91
LOW WATER LEVEL
LSL-X84
SPARE RUNNING INTERLOCK
MINIMUM AIR FLOW
FSL-X11
LOW GAS PRESSURE
PSL-X61A
HIGH GAS PRESSURE
PSH-X61A
RUNNING INTERLOCKS (NON-RECYCLING)
SKP-15 POC
SKP-25 POC
SHUTOFF VALVE PROOF OF CLOSURE
SSOV LEAK TEST SW
LOW FIRE PROVING
(NOT USED)
HIGH FIRE PROVING
(NOT USED)
FUEL 1 SELECTED
(NOT USED)
FUEL 2 SELECTED
FD FAN BYPASS STATUS
BOILER AQUASTAT (OPTIONAL)
CFH OR DHW CFH OPTION
(OPTIONAL)
REMOTE RESET
(NOT USED)
PREFERRED
UTILITIES MFG CORPORATION
BOILER CONTROL SYSTEM
FLEXFIT FLAME SAFEGUARD & COMBUSTION CONTROLS
WIRING DIAGRAM
PCG-FLEXFIT-STD
SHEET: 2 OF 5

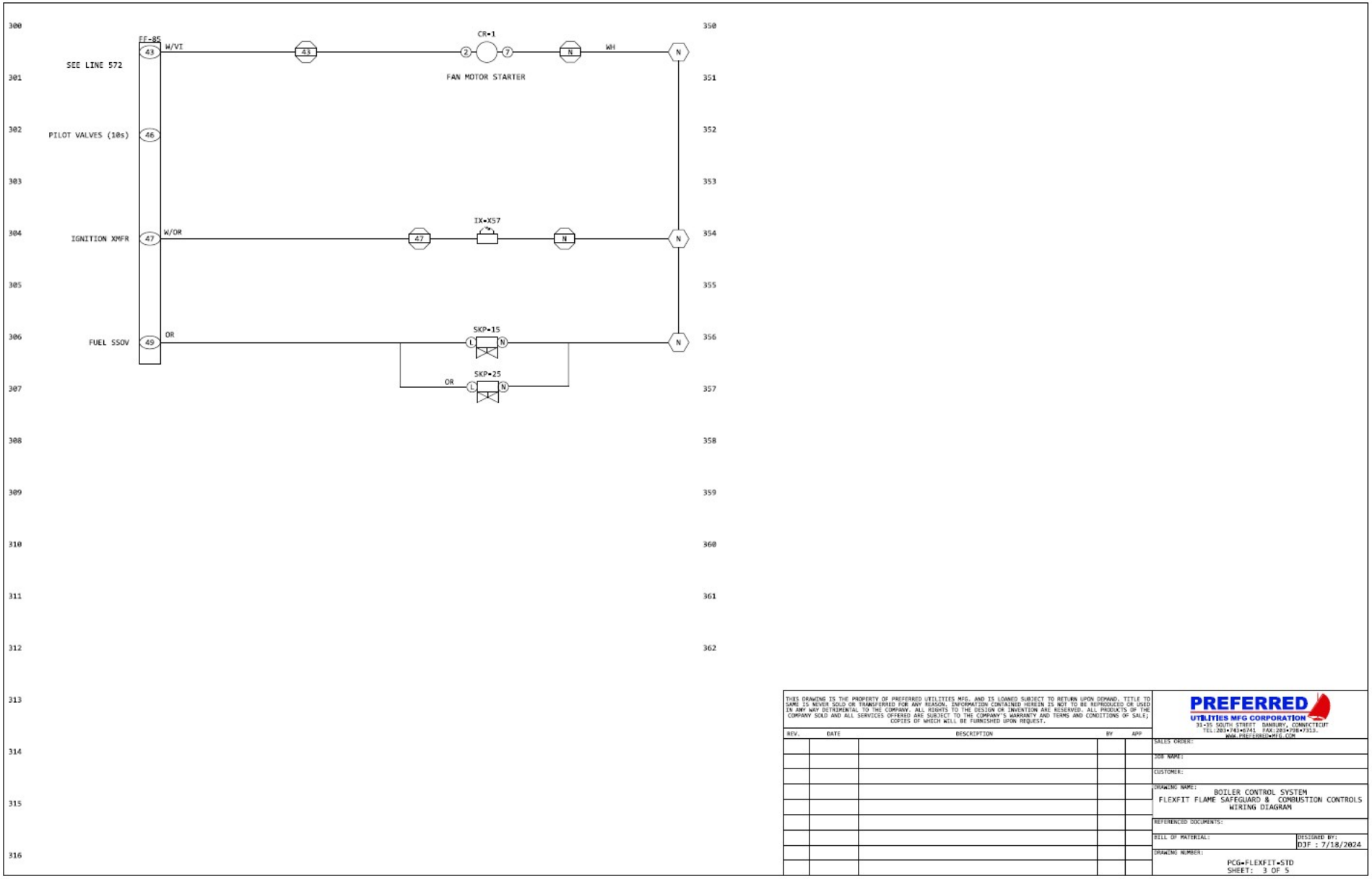
FF-85
W/VI
43
SEE LINE 572
CR-1
FAN MOTOR STARTER
WH
PILOT VALVES (10s)
46
IGNITION XMFR
47
W/OR
IX-X57
FUEL SSOV
49
OR
SKP-15
SKP-25
THIS DRAWING IS THE PROPERTY OF PREFERRED UTILITIES MFG. AND IS LOANED SUBJECT TO RETURN UPON DEMAND. TITLE TO SAME IS NEVER SOLD OR TRANSFERRED FOR ANY REASON. INFORMATION CONTAINED HEREIN IS NOT TO BE REPRODUCED OR USED IN ANY WAY DETRIMENTAL TO THE COMPANY. ALL RIGHTS TO THE DESIGN OR INVENTION ARE RESERVED. ALL PRODUCTS OF THE COMPANY SOLD AND ALL SERVICES OFFERED ARE SUBJECT TO THE COMPANY'S WARRANTY AND TERMS AND CONDITIONS OF SALE; COPIES OF WHICH WILL BE FURNISHED UPON REQUEST.
REV.
DATE
DESCRIPTION
BY
APP
PREFERRED
UTILITIES MFG CORPORATION
31-35 SOUTH STREET DANBURY, CONNECTICUT
TEL:203•743•6741 FAX:203•798•7313.
WWW.PREFERRED-MFG.COM
SALES ORDER:
JOB NAME:
CUSTOMER:
DRAWING NAME:
BOILER CONTROL SYSTEM
FLEXFIT FLAME SAFEGUARD & COMBUSTION CONTROLS
WIRING DIAGRAM
REFERENCED DOCUMENTS:
BILL OF MATERIAL:
DESIGNED BY:
DJF : 7/18/2024
DRAWING NUMBER:
PCG-FLEXFIT-STD
SHEET: 3 OF 5

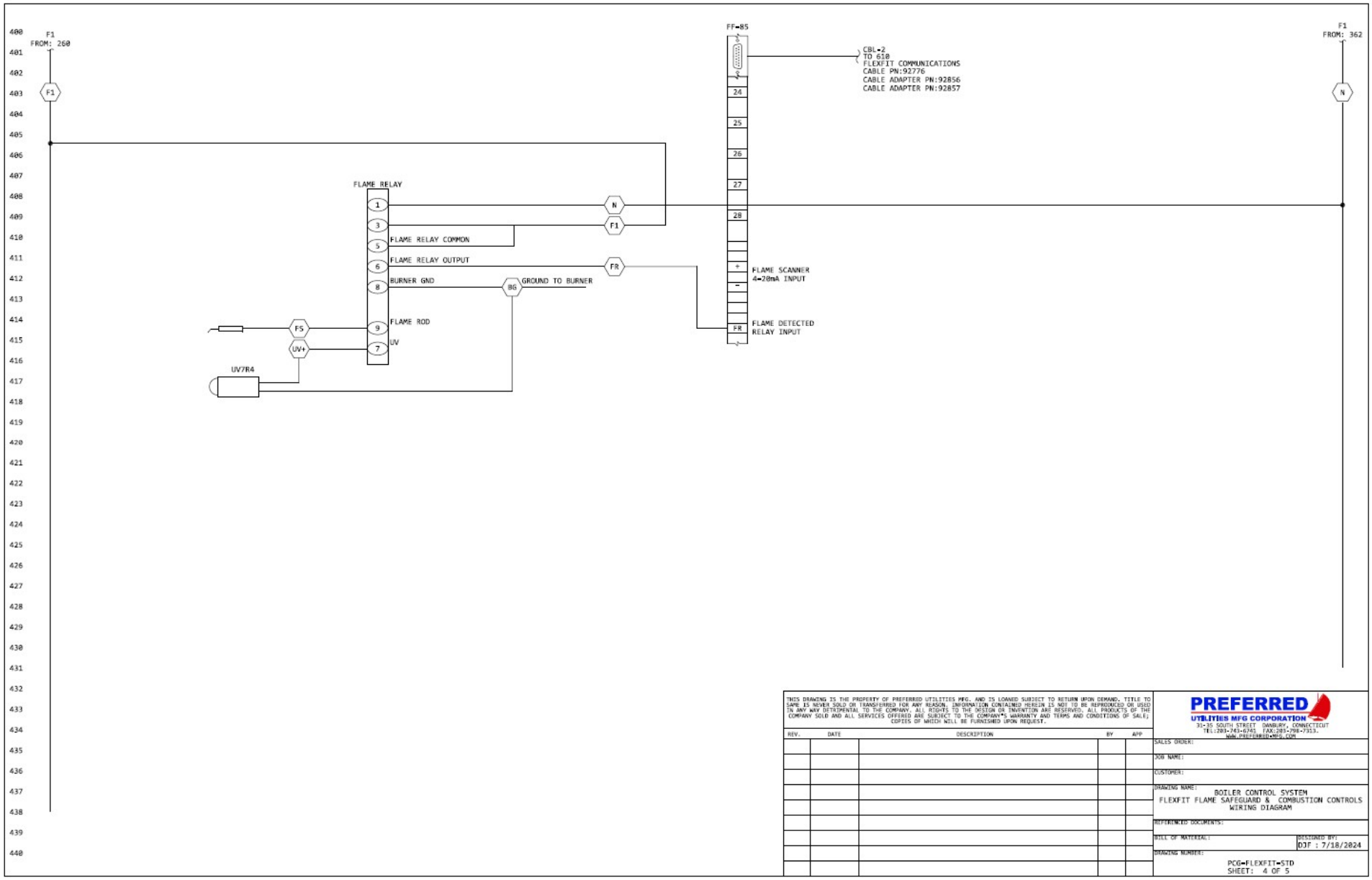
F1
FROM: 260
F1
FF-85
CBL-2
TO 610
FLEXFIT COMMUNICATIONS
CABLE PN:92776
CABLE ADAPTER PN:92856
CABLE ADAPTER PN:92857
F1
FROM: 362
N
24
25
26
27
28
FLAME RELAY
1
3
5
6
8
9
7
N
F1
FLAME RELAY COMMON
FLAME RELAY OUTPUT
FR
BURNER GND
BG
GROUND TO BURNER
FS
UV+
FLAME ROD
UV
UV7R4
+
-
FLAME SCANNER
4-20mA INPUT
FR
FLAME DETECTED
RELAY INPUT
THIS DRAWING IS THE PROPERTY OF PREFERRED UTILITIES MFG. AND IS LOANED SUBJECT TO RETURN UPON DEMAND. TITLE TO SAME IS NEVER SOLD OR TRANSFERRED FOR ANY REASON. INFORMATION CONTAINED HEREIN IS NOT TO BE REPRODUCED OR USED IN ANY WAY DETRIMENTAL TO THE COMPANY. ALL RIGHTS TO THE DESIGN OR INVENTION ARE RESERVED. ALL PRODUCTS OF THE COMPANY SOLD AND ALL SERVICES OFFERED ARE SUBJECT TO THE COMPANY'S WARRANTY AND TERMS AND CONDITIONS OF SALE; COPIES OF WHICH WILL BE FURNISHED UPON REQUEST.
REV.
DATE
DESCRIPTION
BY
APP
PREFERRED
UTILITIES MFG CORPORATION
31-35 SOUTH STREET DANBURY, CONNECTICUT
TEL:203-743-6741 FAX:203-798-7313.
WWW.PREFERRED-MFG.COM
SALES ORDER:
JOB NAME:
CUSTOMER:
DRAWING NAME:
BOILER CONTROL SYSTEM
FLEXFIT FLAME SAFEGUARD & COMBUSTION CONTROLS
WIRING DIAGRAM
REFERENCED DOCUMENTS:
BILL OF MATERIAL:
DESIGNED BY:
DJF : 7/18/2024
DRAWING NUMBER:
PCG-FLEXFIT-STD
SHEET: 4 OF 5

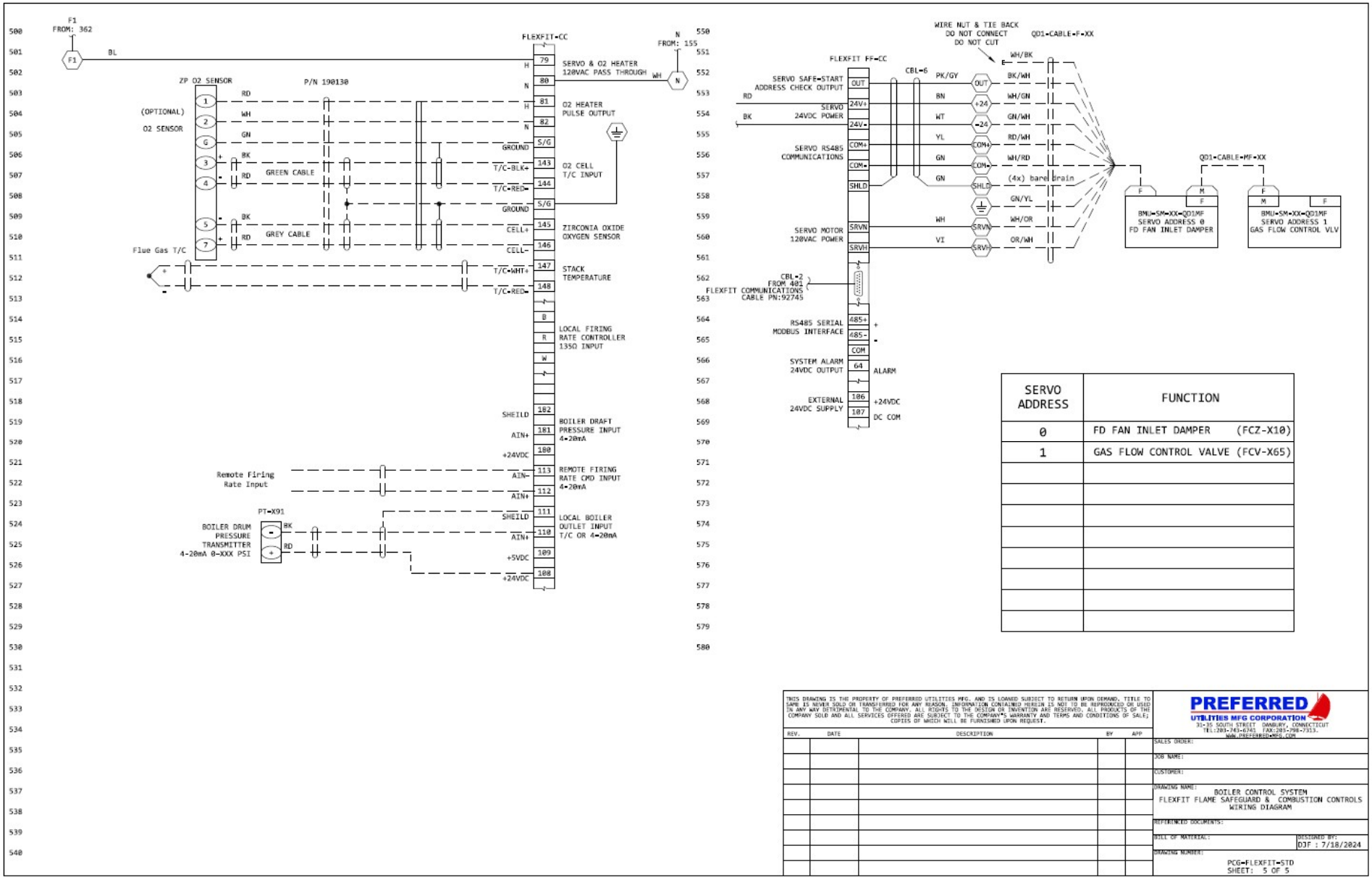

SERVO ADDRESS	FUNCTION
0	FD FAN INLET DAMPER (FCZ-X10)
1	GAS FLOW CONTROL VALVE (FCV-X65)

THIS DRAWING IS THE PROPERTY OF PREFERRED UTILITIES MFG. AND IS LOANED SUBJECT TO RETURN UPON DEMAND. TITLE TO SAME IS NEVER SOLD OR TRANSFERRED FOR ANY REASON. INFORMATION CONTAINED HEREIN IS NOT TO BE REPRODUCED OR USED IN ANY WAY DETRIMENTAL TO THE COMPANY. ALL RIGHTS TO THE DESIGN OR INVENTION ARE RESERVED. ALL PRODUCTS OF THE COMPANY SOLD AND ALL SERVICES OFFERED ARE SUBJECT TO THE COMPANY'S WARRANTY AND TERMS AND CONDITIONS OF SALE; COPIES OF WHICH WILL BE FURNISHED UPON REQUEST.

REV.	DATE	DESCRIPTION	BY	APP

PREFERRED
UTILITIES MFG CORPORATION
31-35 SOUTH STREET DANBURY, CONNECTICUT
TEL:203-743-6741 FAX:203-798-7353.
www.PREFERRED-MFG.COM

SALES ORDER:
JOB NAME:
CUSTOMER:
DRAWING NAME: BOILER CONTROL SYSTEM
FLEXFIT FLAME SAFEGUARD & COMBUSTION CONTROLS
WIRING DIAGRAM
REFERENCED DOCUMENTS:
BILL OF MATERIAL:
DESIGNED BY: DJF : 7/18/2024
DRAWING NUMBER: PCG-FLEXFIT-STD
SHEET: 5 OF 5

C. FLAME SENSING WITH EQUIPPED CONTROLS

UTILIZING FLAME ROD SENSING

The FlexFit-85 controls utilize an interposing flame relay to interface with a flame ionization rod. The flame rectification phenomenon occurs as follows: The ignited gas flame causes the immediate atmosphere around the flame to become ionized (gas atoms become electrically charged). The ionization causes the atmosphere around the flame to become electrically conductive. An AC voltage output from the control sensing circuit is routed through the flame sensor probe. When the sensor probe and the burner head are both in contact with a properly adjusted flame, the burner head with its larger surface attracts more free electrons, thus becoming negatively charged. The sensor probe with its small surface area gives up free electrons, thus becoming positively charged. The free electrons from the AC voltage in the sensor probe flow through the ionized gas flame to the grounded burner head. As the AC current passes through the gas flame, it is rectified into a DC current flowing back to the grounded side of the sensing circuit. The flame is a switch. When the flame is present, the switch is closed allowing current to flow through the sensing circuit of the control. When no flame is present, the switch is open with no current flowing through the sensing circuit of the control.

FLAME SENSING USING A UV SCANNER

An ultra-violet (UV) scanner is sometimes used with a flame safeguard. The UV scanner senses the presence of flame by viewing the ultra-violet light emitted by the flame. A flame safeguard conducts a check of the UV scanner during each ignition sequence. Prior to opening the gas valves, the flame safeguard will verify a “no flame” signal from the scanner. A UV scanner is not provided, but can easily be added into the system. The PCG-xxx-F compatible part number for purchase is FIR-UV7R4. For wiring a UV scanner into the control, please reference the wiring diagram above and wire the UV scanner between terminals 7 & 8 of the flame relay.

D. TROUBLESHOOTING

The most common fault codes have been noted below. For all FlexFit fault codes and diagnostic codes please refer to the FlexFit-85 Technical Instructions.

Lockout Data

If the condition results in a lockout, a snapshot of the value of virtually every input, output, servo and sensor at the time of the lockout is stored in the FlexFit memory. Time/date stamped lockout data for each of the last 10 lockouts can be viewed via the LCD by going to *Main Menu > Lockout Data*. Table 3 below shows what data is recorded at each lockout. For a full list of lockout messages, refer to the FlexFit-85 instruction manual.

Message Number	Message Data	Message Number	Message Data
0)	LOCKOUT	28)	Aux 3 SP
1)	BMS State	29)	Aux 3 FB
2)	Selected Fuel	30)	Draft Servo SP
3)	Scanner 1 %	31)	Draft Servo FB
4)	Firing Rate % FB	32)	Boiler Demand % 135 Ohm/4-20 P7810
5)	Flue Temp	33)	Remote SP, Firing Rate PID
6)	Boiler Outlet Temp/Press	34)	Local SP, Firing Rate PID
7)	O2 Trim PID SP	35)	Firing Rate % Command
8)	Oxygen	36)	DI Flame Detected Relay
9)	O2 Analyzer Normal	37)	DI Running Interlocks
10)	O2 Trim	38)	DI FD Fan Type
11)	Scaled O2 Trim	39)	DI Start limits
12)	Draft	40)	DI Leak Test PS
13)	Pilot Test Hold	41)	DI Low Fire Switch
14)	Commission Mode	42)	DI Purge Flow / High Fire Switch
15)	Password Level	43)	DI SSOV POC
16)	Fuel Demand deg	44)	DHW Start
17)	Fuel Feedback Position	45)	Warm Standby LFH
18)	FD Servo SP	46)	FGR LFH Active
19)	FD Servo FB	47)	Light Off LFH Active
20)	FD VSD Hz SP	48)	Cold Start Cycle Active
21)	FD VSD Hz FB	49)	DHW Override Active
22)	FGR Servo SP	50)	Modbus Comm Bad
23)	FGR Servo FB	51)	RO Ign Xfmr
24)	Aux 1 Servo SP	52)	RO 10s Pilot
25)	Aux 1 Servo FB	53)	RO MV1 SSOV
26)	Aux 2 SP	54)	RO 15s Pilot/MV2
27)	Aux 2 FB	55)	RO FD Fan

Table 3: Lockout Snapshot Data

I/O Data Display

Navigating to *Main Menu > Utilities > I/O Data Display* provides a means to view the real-time value of every FlexFit field wiring 120 VAC input, analog input, and relay output. This provides a means to simultaneously test field device operation, field wiring, and control hardware operation.

Electrical Noise

Electrical noise is a common problem with burner circuitry because of the mix of 120 VAC, low voltage DC, variable speed drive (VSD) fan motors, and 15.6kv ignition transformer circuits. Sporadic shutdowns, lost or corrupt data, controller reboots, and "Internal Error" messages can be caused by electrical noise. If you suspect electrical noise problems, inspect the boiler wiring for the following issues:

The shields of all 4-20 mA / 0-5 VDC, Thermistor, Thermocouple, Servo and LCD communications, and scanner cables should be connected at one end only, as shown on the wiring schematics. All shield foils, braids, and shield drain wires should be insulated (with either tape or heat shrink) to prevent connections to earth or power ground. Shielded cables that have been pulled through under-sized conduits or fittings with excessive force can have a torn outer casing inside the conduit (out of sight), which allow the shields to connect to the

conduit. Shields connected at both ends, or with unintentional second grounds, add extra noise to a signal instead of reducing noise!

• To prevent noise pick-up, shielded cables should never be run in conduits or trays with AC wiring (any voltage). There are only 3 exceptions to this rule, as detailed on the field wiring diagram (scanner, servos, and the ZP Oxygen Analyzer).

• Ignition transformer pilot spark wiring is particularly noisy. If any problems occur during the time that the spark is active, replace the pilot high voltage wire with automotive grade noise suppression spark plug cabling (either resistance core or spiral wound 'Mag' core cable).

• The load wires that connect a VSD to the motor contain massive amounts of electrical noise potential during normal operation. Carefully read and scrupulously follow all notes for this wiring, as shown on the field-wiring diagram. Modern shielded 3 phase wiring cables with integral grounding wire(s) are now available from Belden, Alpha, and others to further reduce this electrical noise. Improperly shielded VSD generated noise can/will travel through the boiler and building steel and can affect both 120 VAC and low voltage signals in conduits that are far away from the VSD load wiring.

"... Not at Position" Lockouts

The following are considered fuel-air ratio control devices, and can cause a "Not At Position" lockout:

Servos: Fuel 1 Valve, Fuel 2 Valve, F1/F2 Valve, FD Fan Damper, FGR Damper, Aux 1, Aux 2, Aux 3

VSDs: FD VSD, Aux 2 VSD

The FlexFit reads the position (or VSD speed) feedback of all these devices every 0.5 seconds and determines the deviation between the actual position and the established on-curve setpoint. A "… Not at Position" lockout occurs if any device's deviation is more than twice its deadband (or 0.3 degrees, whichever is larger) for longer than 3.5 seconds.

"... Not at Position" Lockout Exceptions

This lockout does not occur during the standby state or when already in lockout for some other reason.

This lockout does not occur when in commission mode except when in the verify points mode.

The duration is extended to 20 seconds during the following transitions: MTFI to modulate

Upon exiting commission mode

Upon activating the verify points mode when in commission mode

Possible Reasons for a "... Not at Position" Lockout

- Mechanical binding of the coupling, valve, or damper to which the servo is connected. Review the Lockout Data to see if it re-occurs consistently at the same approximate position. Re-align the mounting to reduce coupling binding.
- Undersized Servo – insufficient torque Widening the servo deadband can be a temporary solution for medium-to-low-performance burners.
- Loss of 120 VAC to the servo Loose wiring.
- Loss of feedback signal to the FlexFit Loose wiring.

- FD VSD or Aux 2 VSD internal rate limiting is slower than the setting of parameter "P2.1.3 Ramp Rate Sec/30Hz, FD VSD" or "P2.2.3 4-20 Ramp Rate Sec/100%, Aux 2". The Parameters must be set to a slower ramp rate than the slowest VSD ramp rate. This is a manual setting that must be set by the start-up technician.
- FD VSD or Aux 2 VSD Hz feedback 4-20 mA signal calibration doesn't match the required 0-60Hz/4-20mA. Adjust the VSD 4-20 calibration feedback or deadband. See the parameters for "Fuel-Air > FD VSD" or "Fuel-Air > Aux 2".
- The torque requirement for the valve has changed over time (i.e., dried grease, stiffened valve), causing a decrease in servo speed (Error E17 on servo LCD).
- Re-seek limits on servo; valve may need to be loosened or re-greased (if re-greasing the valve, re-seek servo limits afterward, as there will be a change in the torque exerted by the servo). See section "Servo Setup" on page 3-45 for more information.
- Servo limit switch is too close to curve points. Servo limit switches are not as repeatable as the servo feedback pot. If a servo limit switch trip position shifts and stops the servo motor before the desired curve position is reached, a not at position lockout can occur. All servo limit switches must activate at least 2 degrees away from the closest curve point. See section "Servo Setup" for more information.

D. ERROR HISTORY

The purpose of the error history is to view all previous faults and diagnostic codes. Depending on the error, there may be secondary causes to a burner fault. Being able to view these in a separate location once the burner is not running will allow for complete diagnostic of the burner fault.

Press and hold the “Alarm Silence” button on the FlexFit Keypad for more than 5 seconds to bring up the Alarm History screen.

NOTE: The complete FlexFit-85 Controller instruction manual can be found here:

SECTION IV: SERVICE



Make sure that the main gas valves and electrical power disconnect are turned off before opening the burner or removing any parts for service. All cover plates, enclosures, and guards must always be in place, except during maintenance and servicing.

Qualified personnel may only perform burner service and maintenance. Operational checks of components and in-line safety system at each service is necessary.

A. SERVICE SCHEDULE

It is recommended that servicing be conducted once a year or after 3,000 hours of operation by qualified personnel. During service, perform operational checks on all safety systems and components.

Burner	1 year
Electrodes	Replacement/cleaning - 1 year
Motor	1 year
Fan Wheel	1 year – Replace if need for cleaning/imbalance
Leak Check	1 year
Inspection of Electrical	1 year

B. COMPONENT REPLACEMENT SCHEDULE

FlexFit Control Unit	10 years
Valve Control System (Double Valve Body, Regulating, Safety)	10 years
Gas Pressure Switch (High and Low)	10 years
Air Pressure Switch	10 years
Damper Motor (Air and Gas)	10 years

C. BURNER HEAD AND ELECTRODE/SENSOR ASSEMBLY

The burner head and electrodes are part of the burner head assembly. To remove the burner head assembly, follow the procedure outlined below:

1. Physically disconnect gas supply from burner.
2. Disconnect burner from electrical supply.
3. Remove the right hand mounting rod (nearest to gas train connection) and pivot burner body away from burner head (See Figure 9).

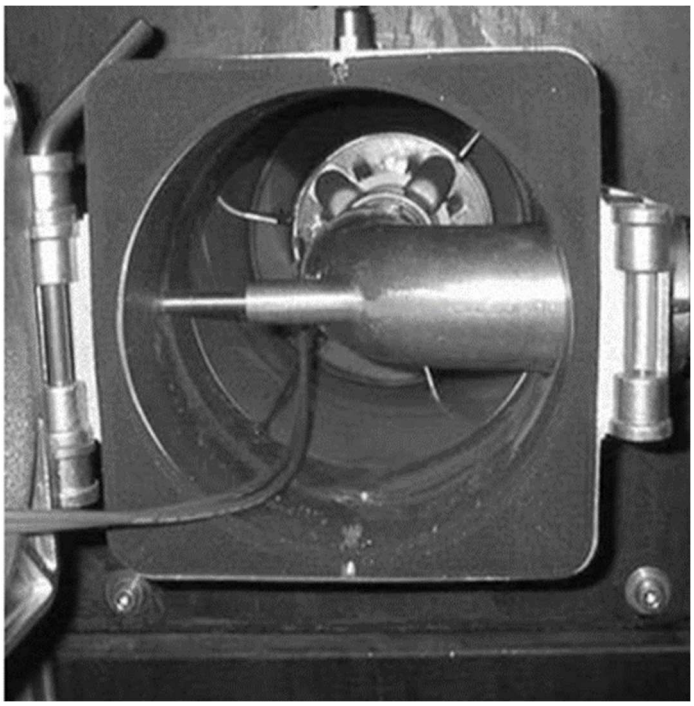

Inside of Burner Head
Figure 9

4. Loosen bolt on left side of burner head to free burner head assembly for removal. (Figure 10)

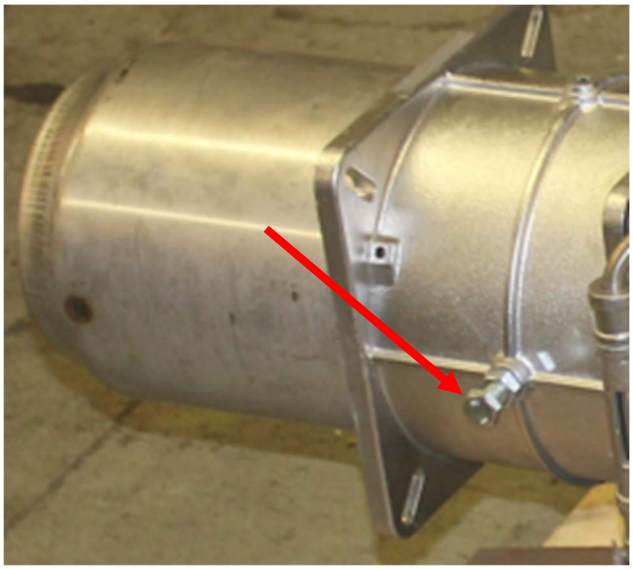

Bolt for Removing Burner Head
Figure 10

5. Carefully disconnect the Ignition and Flame Sense wires from the burner head assembly.
6. Taking care not to lose or damage the Gas Nozzle Seal, remove the burner head assembly from the burner tube.

7. When servicing, clean burner head ports, electrodes and sensor probe. Inspect the sensor probe and electrode wires and ceramic insulators carefully for hairline cracks, which might provide an electrical leak path that could short out the ignition spark, or flame signal.
8. Examine the electrode and sensor probe for any serious corrosion or deterioration of metal at the tips. Check for proper dimensional settings of the sensor probe and electrode (SECTION I subsection J. BURNER INSTALLATION - Figure 5). Adjust and/or replace these assemblies as necessary. Make sure that the ignition and sensor probe wires go to the correct electrodes and the ignition wire boot is in place over the electrode ceramic.

D. AIR PROVING SWITCH

The Air Proving Switch is mounted on the right side of the burner housing. Tubes connect the air proving switch to fittings on the side of the blower housing assembly. The tubing allows pressurized air from the blower housing to travel to the air proving switch causing the diaphragm to close a set of micro-switch contacts, thus completing the circuit. The function of the Air Proving Switch is to ensure that the blower motor and blower wheel are developing sufficient combustion air. Should the blower motor fail or the blower wheel malfunction, the voltage to the gas valves is interrupted.

The air proving switch should never require maintenance. However, should nuisance lockouts occur, the switch can be checked. Disconnecting the 120V leads from the air proving switch and "jump" the leads together will bypass the switch's function. This should only be done by a qualified burner controls technician. If the burner functions correctly, the switch is malfunctioning and should be replaced. A pinched or blocked tube will shut off the flow of pressurized air to the diaphragm creating a failure like a bad air proving switch. Always check to ensure that the clear tubing is not pinched.

NOTICE

If a jumper is used to check the switch, the jumper **MUST** be removed, and the Air Proving Switch reconnected or an unsafe condition can occur resulting in **PERSONAL INJURY OR DEATH**

E. COMBUSTION AIR BLOWER AND MOTOR

Cleaning of the combustion air blower is required if the blades show an accumulation of dust and lint, or if the character of the flame indicates a deficiency of combustion air.

The motor and blower wheel are removed as one assembly. Locate the motor wires in the electrical panel. Note the wire connection points in the terminal block and disconnect the motor wires from the terminal block. Remove the six (6) bolts securing the motor to the burner housing.

Should removal of the blower wheel be necessary for cleaning or replacement of either it or the motor, the blower wheel must be re-positioned correctly on the motor shaft. (Figure 11)

NOTE: DO NOT REMOVE BLOWER WHEEL FROM MOTOR SHAFT DURING PERIODIC CLEANING.

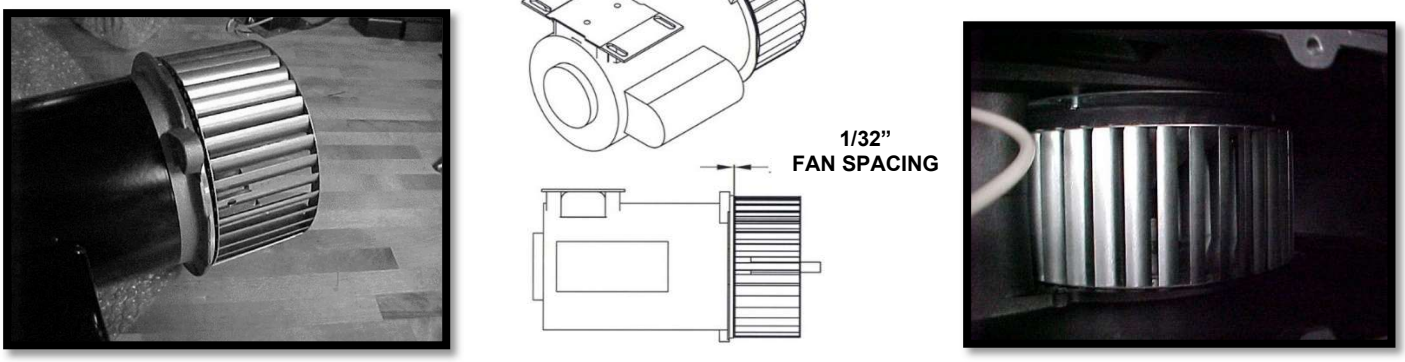

Combustion Air Blower
Figure 11

F. GAS PRESSURE SWITCHES

The gas pressure switches should never require maintenance. If nuisance problems persist, the switches can be temporarily "jumped" out to bypass the switch's function, and test that there is not something else causing the burner to trip. This should only be done by a qualified burner controls technician. If the burner functions correctly, the switch has malfunctioned.

NOTICE

If a jumper is used to check the switch, the jumper **MUST** be removed, and the Gas Pressure Switch reconnected, or an unsafe condition can occur resulting in **PERSONAL INJURY OR DEATH.**

SECTION V: TECHNICAL INFORMATION

A. NUISANCE LOCKOUTS/FLAME SENSING PROBLEMS

Preferred's Comet series gas burners utilize a flame rod or prove flame through the process of flame rectification. One of the most common problems with this type of electronic flame sensing system is the "nuisance lockout". Lockouts are not generally due to the burner failing to ignite, but rather simply the failure of the system to sense the establishment of flame. Should this situation exist for a period longer than the ignition control's preprogrammed lockout timing, the control will shut down or go into permanent lockout. The only way to get the burner to re-cycle is to:

1. Press the "Reset" button on the FlexFit user interface or the "Reset" switch on the control box (if equipped).

The following situations can lead to flame sensing problems and can be checked without disassembling the main burner:

1. The burner is not properly grounded to "earth ground".
2. The ignition control is not properly grounded to the burner itself. Using an ohmmeter, check the wire attached to both parts for good contact and continuity.
3. The burner ignition control is polarity sensitive. The polarity of the incoming line voltage may be reversed. Verify that black and white wires are power from the controller and neutral respectively, and that they are connected to the corresponding black and white wires on the burner.

The remaining checks and/or adjustments require removal of the gas train:

1. Electrical continuity from the "flame sense" terminal of the Flame Relay control to the end of the flame rod may be compromised. Check all quick-connect terminations and connections. Check the continuity with an ohmmeter while flexing wires to assure no hidden conductor breakage exists. If replaced, wiring must be of equal or heavier gauge and equal, or better temperature rating.
2. The flame rod probe may be grounded out. Assure that the flame rod probe is not touching the burner head. The probe should be positioned as indicated in Figure 12 below.
3. The flame rod probe should be free of soot and creosote. Deposits may insulate the probe, making it difficult to pass the electrical charge to the flame. The probe can be cleaned with steel wool, emery paper or fine sandpaper.
4. The flame rod probe may be burned away. Check it against dimensions on the electrode settings drawing. (Figure 12)
5. The dimensional location of the flame rod probe may be incorrect, or the probe may be distorted. Check it against dimensions on the electrode settings drawing and adjust if necessary. (Figure 12)
6. The spark electrode gap may be incorrect, resulting in no spark or an inadequate spark that will not ignite the gas properly. Check the electrode gap against the electrode settings drawing and adjust if required. (Figure 12)
7. The burner body is not properly grounded to the burner head. Check to ensure the ground wire is properly connected to the ground tab on the burner head assembly and the ground tab on the burner body.

8. The high voltage lead wire from the ignition transformer to the tip of the spark electrode may have broken, preventing the high voltage current from passing to the electrode tip. Check all connections thoroughly and/or check continuity of the lead wire assembly with an ohmmeter.

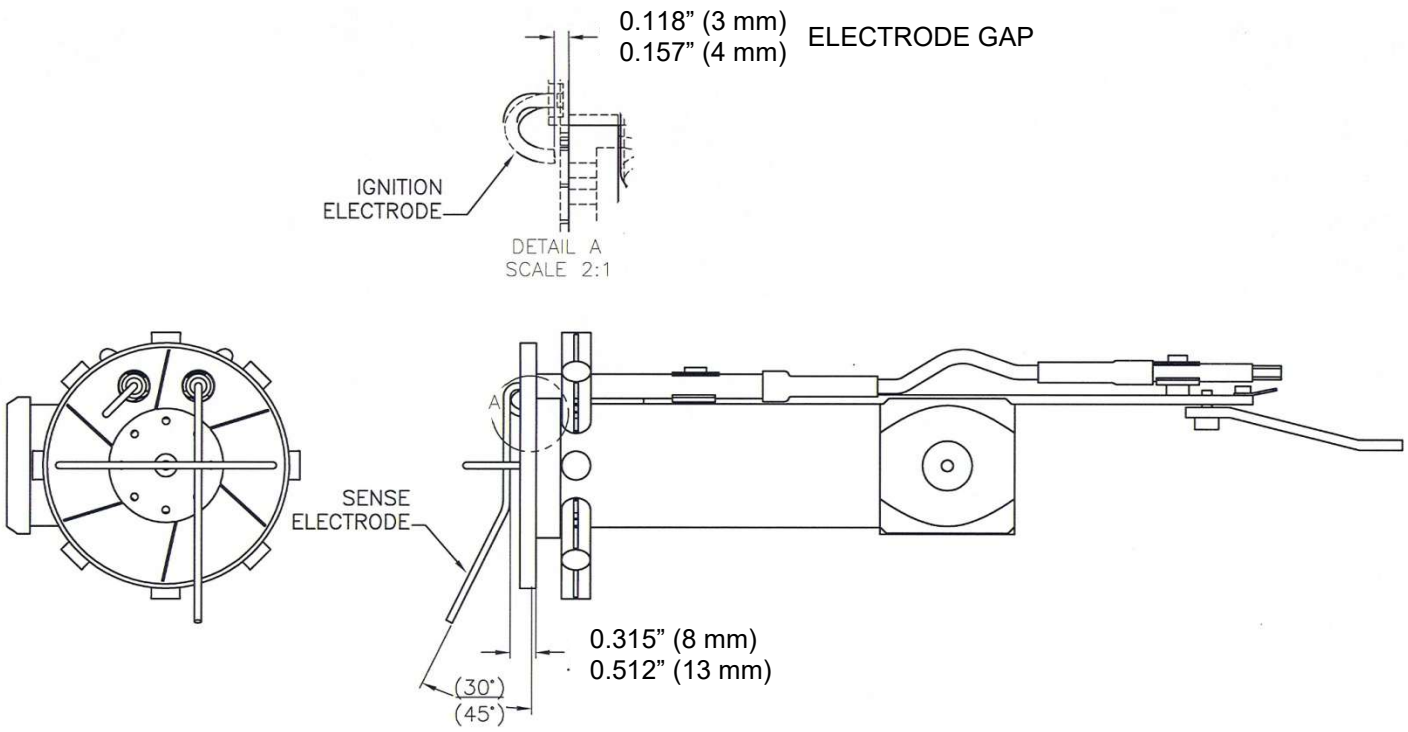

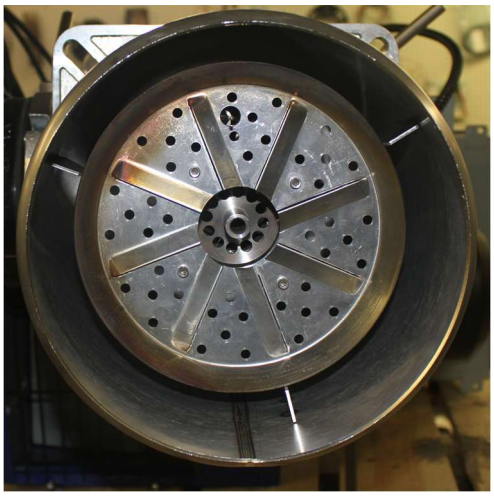

Electrode and Flame Rod Location Settings
Figure 12

Once all the items listed previously have been checked and corrected as necessary, reinsert the gas train assembly into the burner.

NOTE: BE CAREFUL NOT TO ACCIDENTALLY REPOSITION EITHER THE FLAME ROD PROBE OR ELECTRODE DURING REINSTALLATION OF THE GAS TRAIN ASSEMBLY.

If, after all the above listed items have been carefully checked, the burner still fails to work, check that the spark electrode is sparking to the burner head. If the unit does not spark, the ignition transformer is bad and must be replaced.

SECTION VI: SPARE PARTS LIST

Item	PUMC P/N
Gasket Set - PCG-150-200-250-300	SP-PCX-GS-150-250-300
Electrode Set - PCG-150-200-250-300	SP-PCX-ES-150-250-300
Burner Tube - PCG-200-250-300	SP-PCX-AT-200-250-300
Mixer Head Assembly w/Electrodes LP- PCG-200-250-300	SP-PCL-MH-250-300
Mixer Head Assembly w/Electrodes NG- PCG-250-300	SP-PCG-MH-300
Air Damper - PCG-150-200-250-300	SP-PCX-AD-150-250-300
Ignition and Ionization Cable Set - PCG-150-200-250-300	SP-PCX-CS-150-250-300
Mounting Rod - PCG-150-200-250-300	SP-PCX-MR-150-250-300
Fan Motor - PCG-250	SP-PCX-FM-250
Fan Wheel - PCG-250	SP-PCX-FW-250
Air Switch	SP-PCX-APS
Low Gas Pressure Switch	SP-PCG-LGP
High Gas Pressure Switch	SP-PCG-HGP
Gas Valve Body, SSOV 2.0"	SP-PCG-SSOV-VB
SKP15.011U1	SP-PCG-SSOV-U
SKP25.011U1	SP-PCG-SSOV-D
Motor Starter - PCG-250	SP-PCX-MS-250
Overload Protector PCG-250	SP-PCX-OP-250
FlexFit 3 ft-lb Servo	BMU-SM-03DC-QD1MF
FlexFit-85 Burner Controller	FlexFit-85
24VdcPower Supply	92443-P
Flame Relay	PCG-FLAME-MODULE
Flame Relay Base	PCG-FLAME-BASE
UV Scanner	FIR-UV7R4
QD1 Cable, FlexFit to Air Servo	QD1-Cable-F-13
QD1 Cable, Air Servo to Fuel Servo, 3.3ft	QD1-Cable-MF-3.3

SECTION VII: END-USER INSTRUCTIONS

Keep the area around the burner clear and free of combustible materials, gasoline or other flammable liquids or vapors. Do not obstruct burner air openings or ventilation grilles for combustion air. If the burner is to be shut down for an extended time, the main manual gas valve should be closed as a precaution.

NOTE*:* CHECK THE BURNER FLAME PERIODICALLY. A PROPER NATURAL GAS FLAME WILL APPEAR BLUE AT THE BURNER HEAD WITH ORANGE AND YELLOW TIPS. A PROPER PROPANE GAS FLAME WILL APPEAR BLUE AT THE BURNER HEAD WITH YELLOW TIPS. IF THE FLAME IS TOO RICH, IT WILL APPEAR BILLOWY AND YELLOW WITH HAZY TIPS, IF TOO LEAN, IT WILL APPEAR SHORT AND ALL BLUE. BURNER CLEANING AND/OR READJUSTMENT IS INDICATED BY FLAMES THAT ARE TOO RICH OR TOO LEAN. A COMBUSTION ANALYZER MUST BE USED TO FINE TUNE THE BURNER.

NOTICE

IF ANY FLAME IS OBSERVED WHEN THE BURNER IS ON STANDBY, OR IF THE IGNITION SPARK OR FUEL VALVE IS HEARD TO COME ON ANY TIME OTHER THAN MAIN TRIAL FOR IGNITION, IMMEDIATELY TURN OFF THE MANUAL GAS CONTROL AND MAIN POWER. A DANGEROUS CONDITION HAS DEVELOPED AND MUST BE CORRECTED.

CONTACT A QUALIFIED SERVICE TECHNICIAN FOR CLEANING, ADJUSTMENT OR REPAIR.

LIGHTING INSTRUCTIONS:

1. Turn the main electrical disconnect power switch on.
2. Open all manual gas valves.
3. Set thermostat or operating control to call for heat.
4. Turn burner on-off switch to the on position.

If the burner has failed to light, or if the burner lights then goes out, note the fault code on the FlexFit display and refer to SECTION III – OPERATION AND TROUBLESHOOTING. Press and hold the “Reset” button to clear the fault code and re-attempt ignition.

TO SHUT OFF:

1. Turn the main power switch off or turn the burner switch off.
2. Shut all manual gas valves.

For further questions, please see SECTION II - INITIAL START UP.

START-UP & SERVICE NOTES

Record the installation data, the combustion readings, etc., and affix to this manual, or the burner and/or appliance. Space has been provided for start-up notes, dealer’s name, address, service telephone numbers, emergency telephone numbers, as well as the date of installation.

NOTES